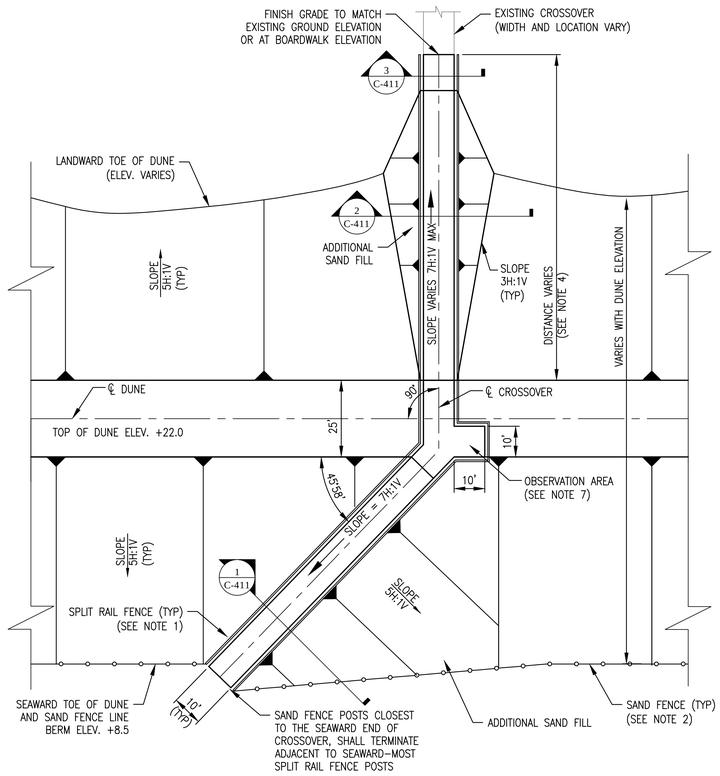

1 PLAN - TYPICAL PEDESTRIAN CROSSOVER (BAY HEAD - OSBORNE ST & LAVALLETTE & BERKELEY)
SCALE: AS SHOWN
20 0 20 40
SCALE IN FEET

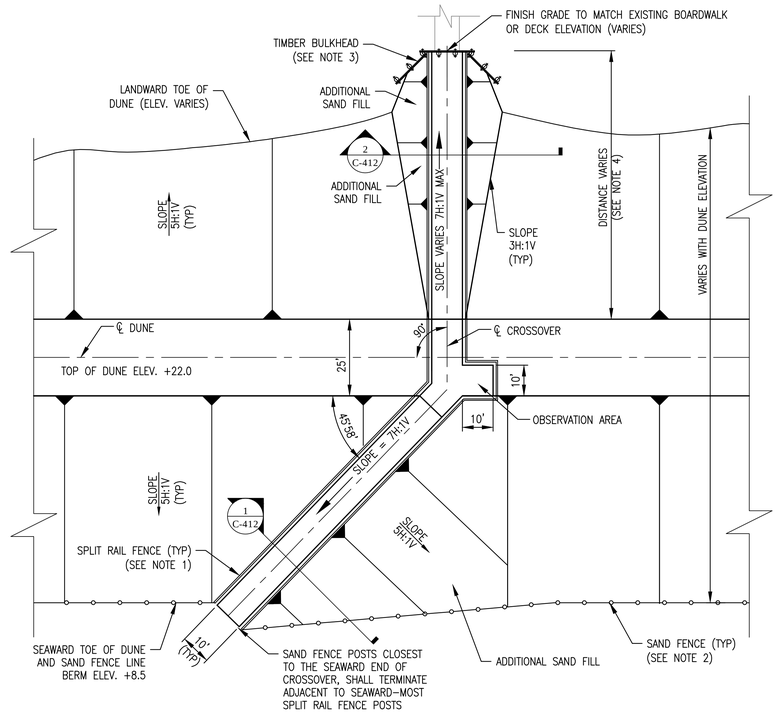

2 PLAN - TYPICAL PEDESTRIAN CROSSOVER WITH STABILIZATION MAT. (TOMS RIVER)
SCALE: AS SHOWN
20 0 20 40
SCALE IN FEET

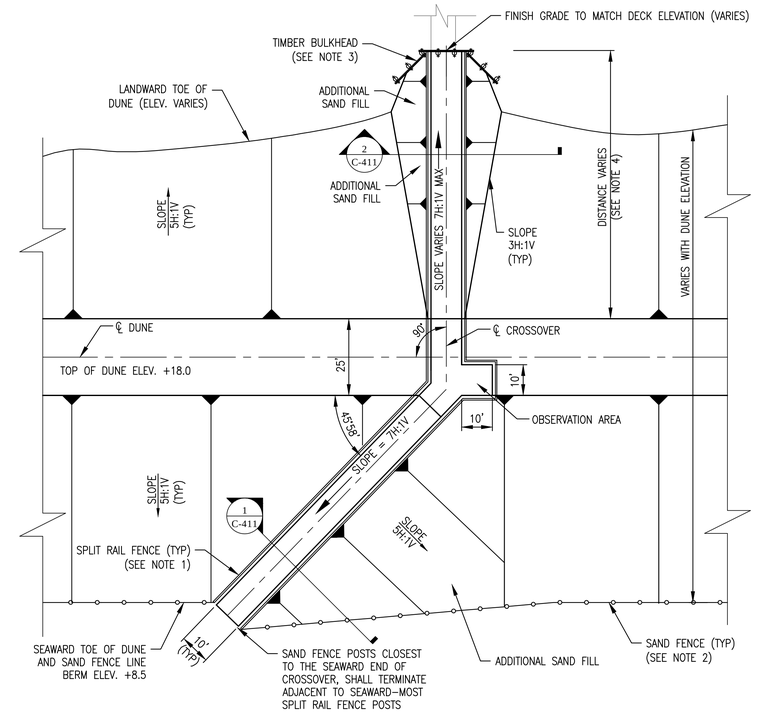

3 PLAN - TYPICAL PEDESTRIAN CROSSOVER (SEASIDE HEIGHTS)
SCALE: AS SHOWN
20 0 20 40
SCALE IN FEET

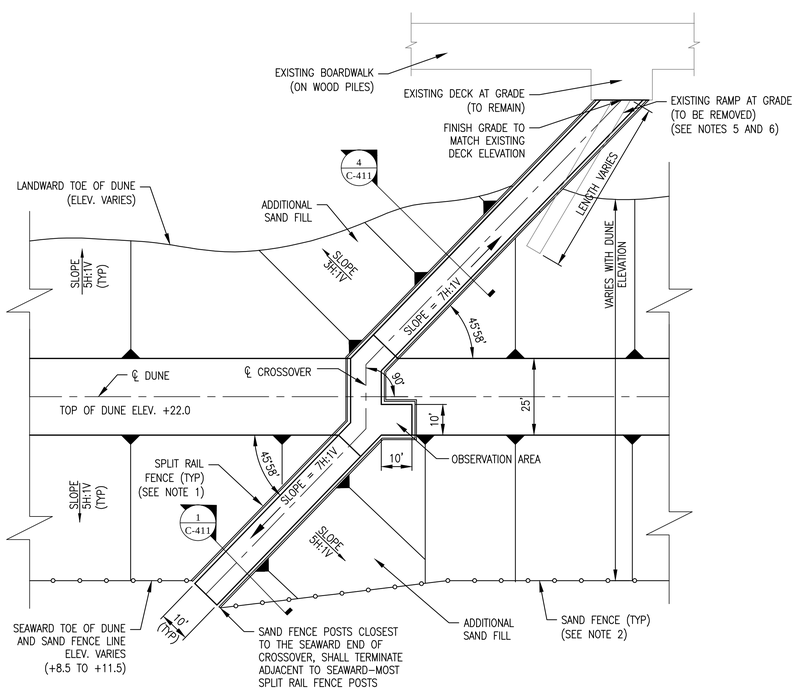

4 PLAN - TYPICAL PEDESTRIAN CROSSOVER (SEASIDE PARK)
SCALE: AS SHOWN
20 0 20 40
SCALE IN FEET

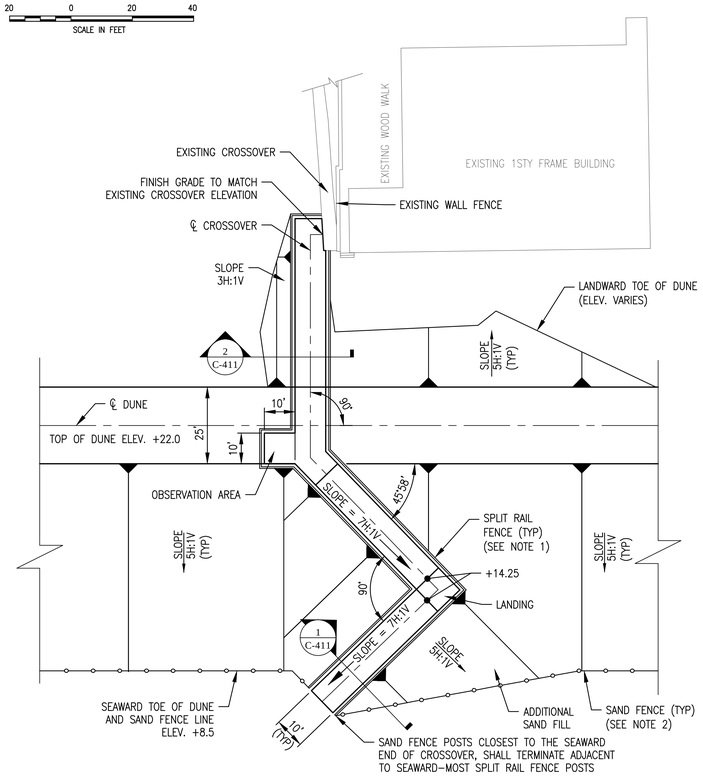

5 PLAN - PEDESTRIAN CROSSOVER (BERKELEY - 24TH AVE.)
SCALE: AS SHOWN
20 0 20 40
SCALE IN FEET

NOTES:

1. SPLIT RAIL FENCE POSTS NOT SHOWN FOR CLARITY. FOR DETAILS OF SPLIT RAIL FENCE, SEE SHEET C-417.
2. FOR SAND FENCE AND DUNE PLANTING DETAILS, SEE SHEET C-419.
3. FOR DETAILS OF TIMBER BULKHEAD, SEE DETAIL 1/C-418.
4. CONSTRUCTION OF FULL LENGTH OF CROSSOVER ON LAND SIDE OF DUNE VARIES WITH EXISTING GROUND ELEVATION.
5. SEE SHEET C-400 AND C-401 FOR DUNE CROSSOVER SCHEDULE AND LOCATION SPECIFIC REMARKS.
6. RAMPS DO NOT EXIST AT ALL LOCATIONS. SOME LOCATIONS MAY HAVE ADDITIONAL DECKS AND CONCRETE BENCHES TO BE REMOVED. FOR QUANTITIES, SEE SHEET C-402.
7. OBSERVATION AREA IS NOT TO BE INSTALLED AT OSBORNE STREET IN BAY HEAD

US Army Corps of Engineers
Philadelphia District

MARK	DESCRIPTION	DATE	BY

MARK	DESCRIPTION	DATE	BY

U.S. ARMY CORPS OF ENGINEERS
PHILADELPHIA DISTRICT
PHILADELPHIA, PA 19107-3390
www.nap.usace.army.mil

DWN BY: GMG / PGS
CKD BY: DAS
DESIGNED BY: ADD
REVIEWED BY: DWR, TEB
ISSUED/RELEASE DATE: 95% REVIEW / 06 JUN 2016
PROJ. NUMBER:
SOLICITATION NUMBER: IFB NO. W912BU-16-B-0014
CONTRACT NUMBER:
DWG SCALE: AS SHOWN
DWG. SIZE: 36"X22"ANSI E1
FILE NAME: C-403 PLANS - PEDESTRIAN CROSSOVER.dwg

MANASQUAN INLET TO BARNEGAT INLET
OCEAN COUNTY, NEW JERSEY
BEACHFILL
INITIAL CONSTRUCTION
PLANS - PEDESTRIAN CROSSOVER

SHEET NUMBER
C-403

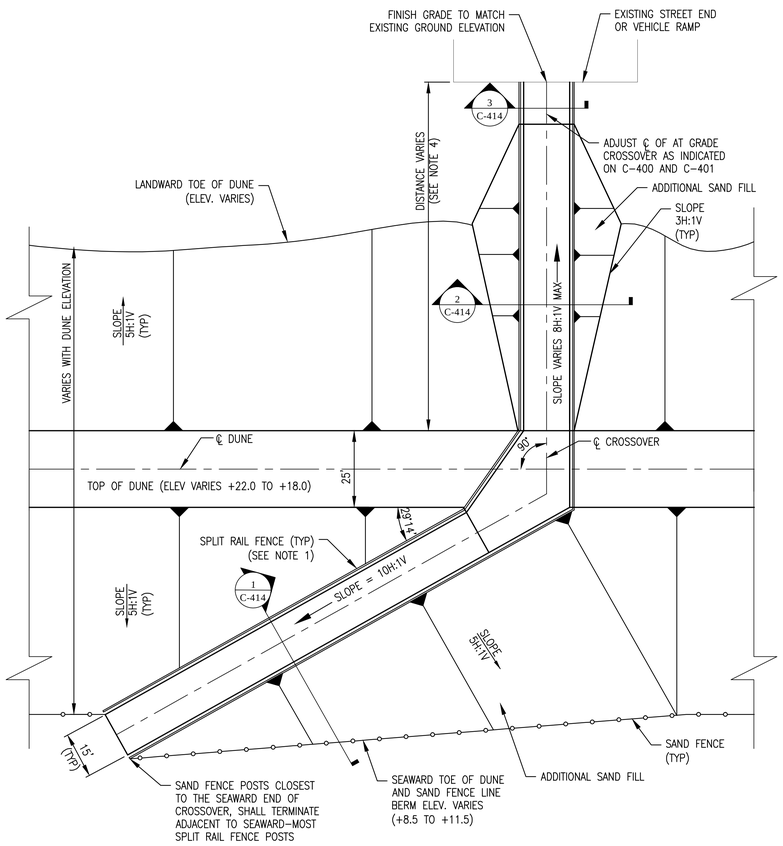

1 PLAN - TYPICAL VEHICLE CROSSOVER
SCALE: AS SHOWN
20 0 20 40
SCALE IN FEET

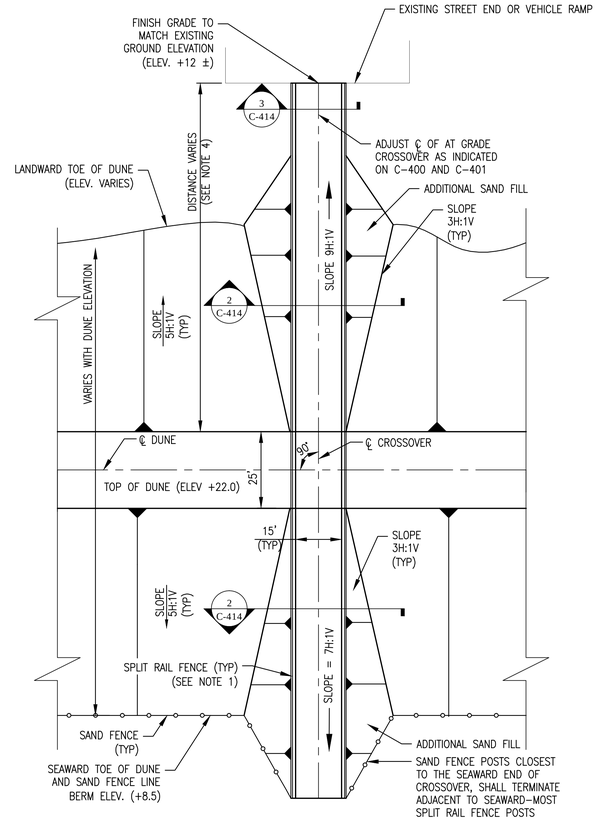

2 PLAN - TYPICAL VEHICLE CROSSOVER (MANTOLOKING)
SCALE: AS SHOWN
20 0 20 40
SCALE IN FEET

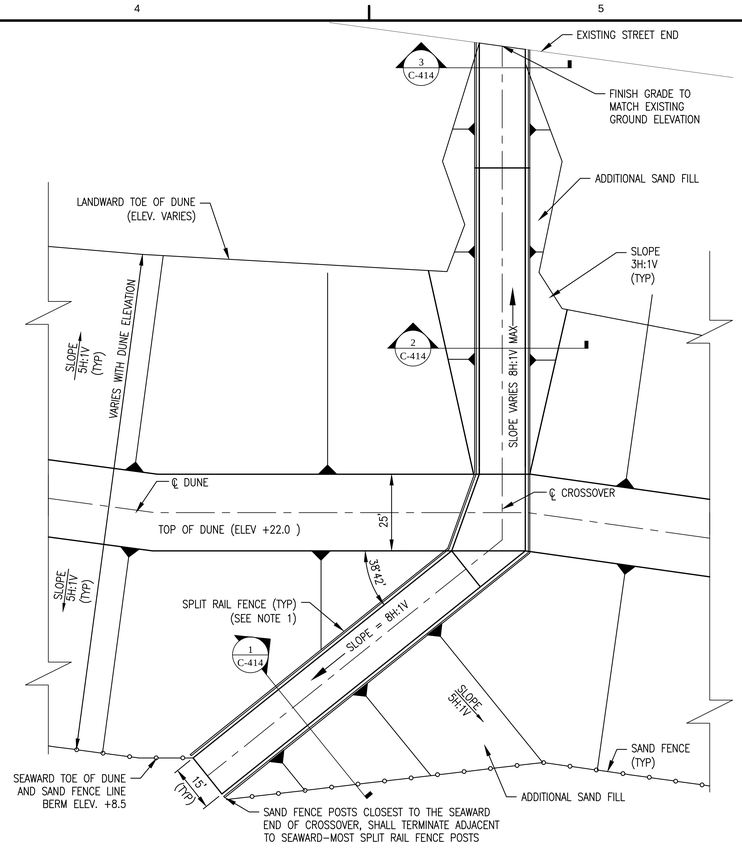

3 PLAN - TOMS RIVER (SOUTH) (HARDING AVE.)
SCALE: AS SHOWN
20 0 20 40
SCALE IN FEET

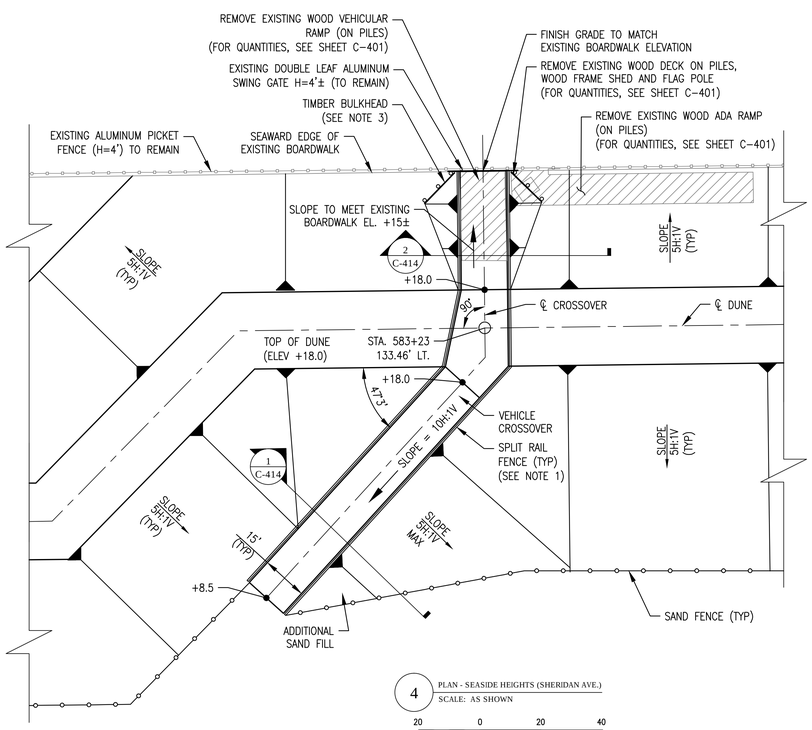

4 PLAN - SEASIDE HEIGHTS (SHERIDAN AVE.)
SCALE: AS SHOWN
20 0 20 40
SCALE IN FEET

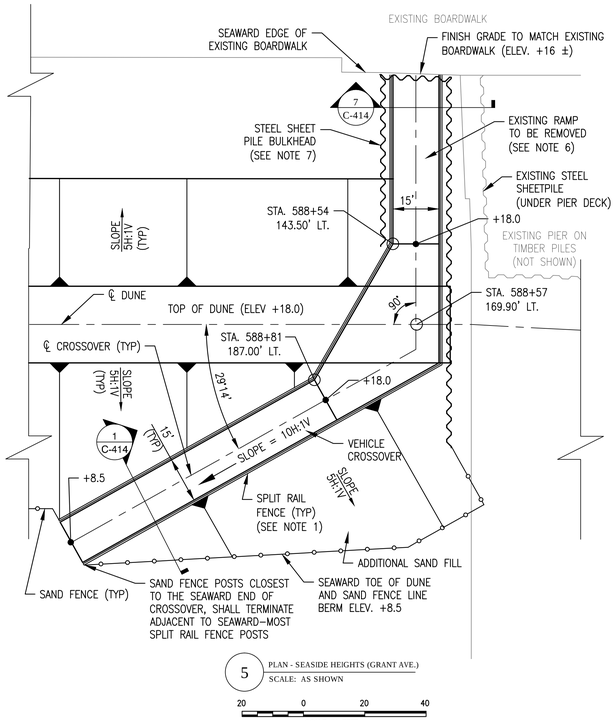

5 PLAN - SEASIDE HEIGHTS (GRANT AVE.)
SCALE: AS SHOWN
20 0 20 40
SCALE IN FEET

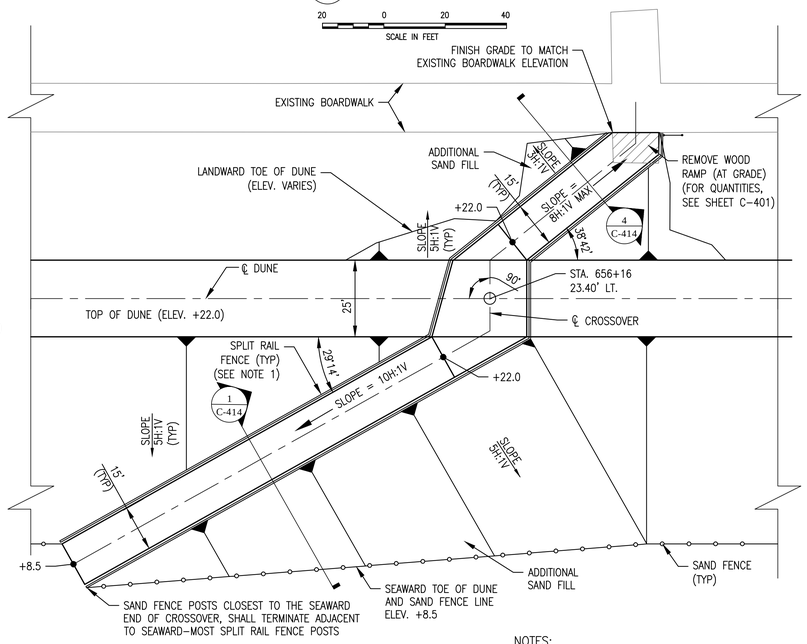

6 PLAN - SEASIDE PARK (BRIGHTON AVE.)
SCALE: AS SHOWN
20 0 20 40
SCALE IN FEET

NOTES:

1. SPLIT RAIL FENCE POSTS NOT SHOWN FOR CLARITY. FOR DETAILS OF SPLIT RAIL FENCE, SEE SHEET C-417.
2. FOR SAND FENCE AND DUNE PLANTING DETAILS, SEE SHEET C-419.
3. FOR DETAILS OF TIMBER BULKHEAD, SEE DETAIL 7/C-418.
4. CONSTRUCTION OF FULL LENGTH OF CROSSOVER ON LAND SIDE OF DUNE VARIES WITH EXISTING GROUND ELEVATION.
5. SEE SHEET C-400 AND C-401 FOR DUNE CROSSOVER SCHEDULE AND LOCATION SPECIFIC REMARKS.
6. DIMENSIONS AND TYPE OF RAMP ARE UNKNOWN.
7. FOR HORIZONTAL GEOMETRY LAYOUT AND DETAILS OF STEEL SHEETPILE BULKHEAD, SEE SHEET C-421.

US Army Corps of Engineers
Philadelphia District

MARK	ACTION	DATE	BY	DESCRIPTION

U.S. ARMY CORPS OF ENGINEERS
PHILADELPHIA DISTRICT
PHILADELPHIA, PA 19107-3390
www.nap.usace.army.mil

DESIGNED BY: GMG / PSS
DWN BY: GMG / PSS
CKD BY: ADD
REVIEWED BY: DWN / TEL
APPROVED BY: DAN
ISSUE/RELEASE DATE: 95% REVIEW / 06 JUN 2018
PROJ. NUMBER:
SOLICITATION NUMBER: IFB NO. W912BU-18-B-0074
CONTRACT NUMBER:
DWG SCALE: AS SHOWN
DWG. SIZE: 22"x 34"ANSI E
FILE NAME: C:\ASFA\TOMS\VEHICLE CROSSOVER.dwg

MANASQUAN INLET TO BARNEGAT INLET
OCEAN COUNTY, NEW JERSEY
BEACHFILL
INITIAL CONSTRUCTION
PLANS - VEHICLE CROSSOVER

SHEET NUMBER
C-404

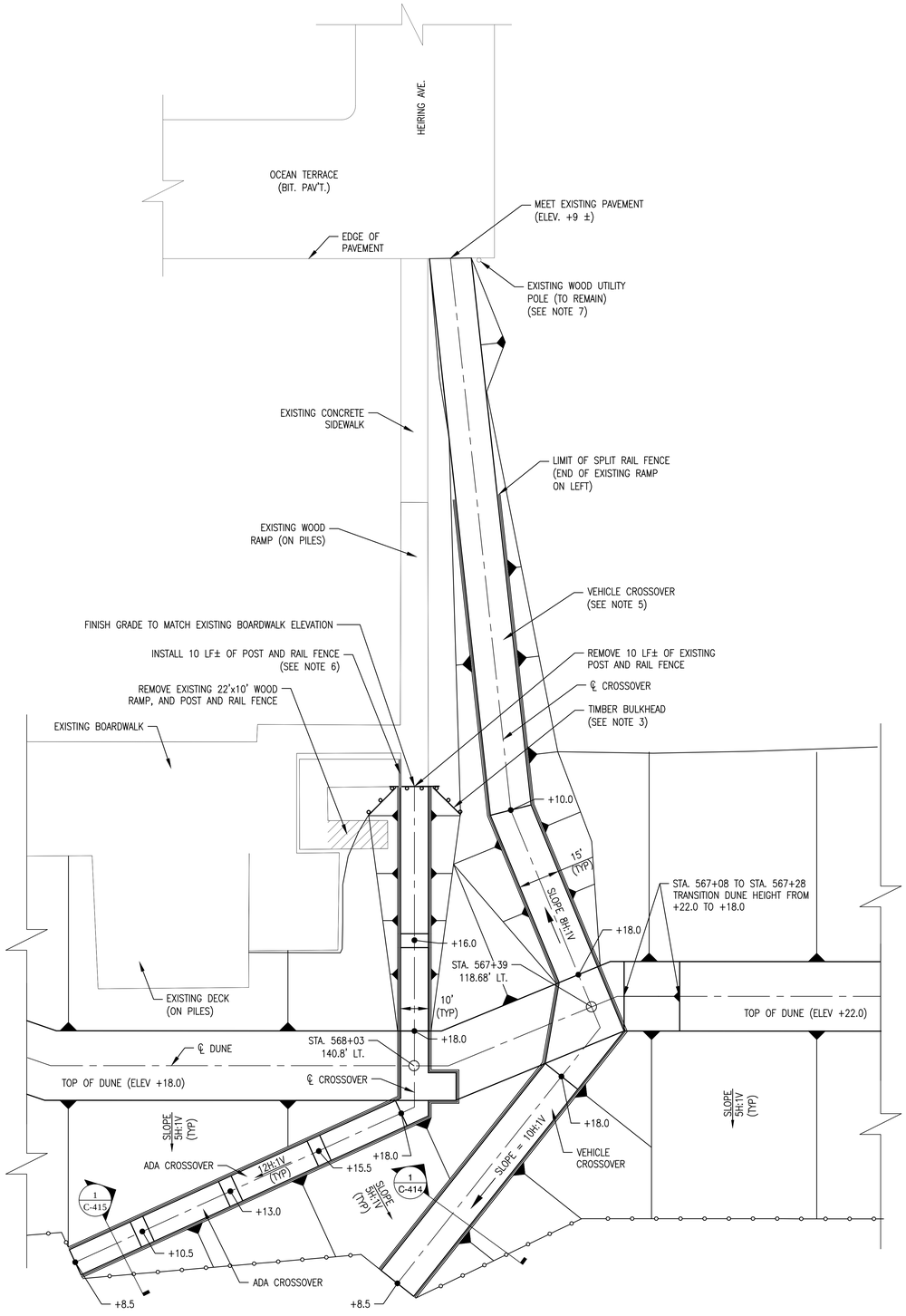

1 PLAN - SEASIDE HEIGHTS (HEIRING AVE.)
SCALE: AS SHOWN

20 0 20 40
SCALE IN FEET

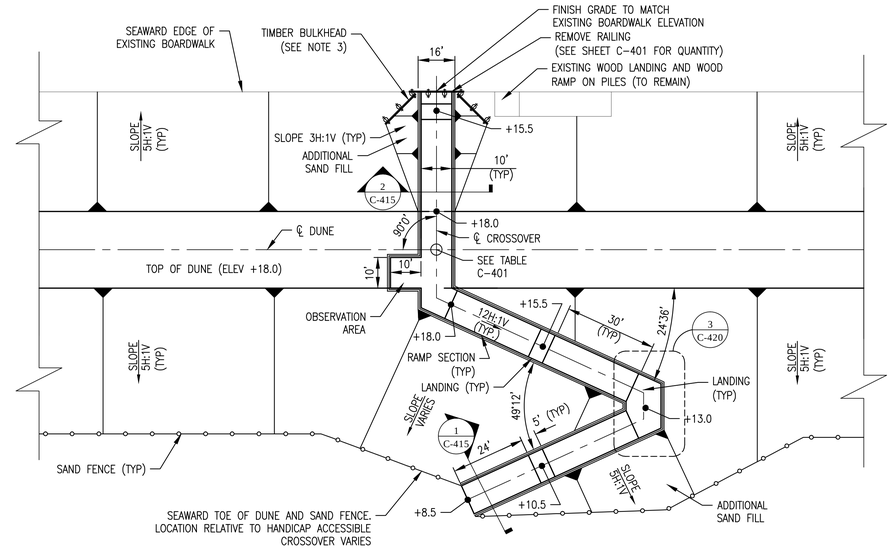

2 PLAN - TYPICAL ADA CROSSOVER (SEASIDE HEIGHTS)
SCALE: AS SHOWN

20 0 20 40
SCALE IN FEET

NOTES:

1. POST AND RAIL FENCE POSTS NOT SHOWN FOR CLARITY. FOR DETAILS OF POST AND RAIL FENCE, SEE SHEET C-417.
2. FOR SAND FENCE AND DUNE PLANTING DETAILS, SEE SHEET C-419.
3. SEE BULKHEAD DETAIL 4/C-418.
4. THE LENGTH OF HANDICAP CROSSOVERS MAY VARY WITH LOCATION AND FINISHED GRADE OR EXISTING GROUND ELEVATIONS. THE RISE ON CROSSOVERS SHALL BE NO MORE THAN 2.5' OVER A RUN OF 30' (12H:1V). LANDING SHALL BE CONSTRUCTED AT A MAXIMUM SPACING OF 30' AND SHALL BE LEVEL FOR A MINIMUM LENGTH OF 5'.
5. CONSTRUCT CROSSOVER WITH UNIFORM PROFILE GRADE FROM EL. +10.0 TO THE EXISTING EDGE OF PAVEMENT (EL. +9 ±).
6. RE-USE EXISTING MATERIALS FROM POST AND RAIL FENCE REMOVED FOR RAMP CONSTRUCTION.
7. CENTER RAMP ALIGNMENT BETWEEN RIGHT EDGE OF EXISTING SIDEWALK AND LEFT EDGE OF EXISTING UTILITY POLE.

US Army Corps of Engineers
Philadelphia District

MARK	ACTION	DATE	BY	DESCRIPTION
-	-	-	-	-

U.S. ARMY CORPS OF ENGINEERS
PHILADELPHIA DISTRICT
PHILADELPHIA, PA 19107-3390
www.nap.usace.army.mil

DWN BY: GMG / PGS
CKD BY: DJA
DESIGNED BY: ADD
ENV'TRONMD BY: ENVIRO TEC
ISSUE/RELEASE DATE: 95% REVIEW / 08 JUN 2018
PROJ. NUMBER:
SOLICITATION NUMBER: #B.W0 W912BU-14-B-0014
CONTRACT NUMBER:
DWG. SCALE: AS SHOWN
DWG. SIZE: 22"X34" ANSI D
FILE NAME: C409DWG-C409DWG-R-0.dwg

MANASQUAN INLET TO BARNEGAT INLET
OCEAN COUNTY, NEW JERSEY
BEACHFILL
INITIAL CONSTRUCTION
PLANS - CROSSOVER
-

SHEET NUMBER
C-409

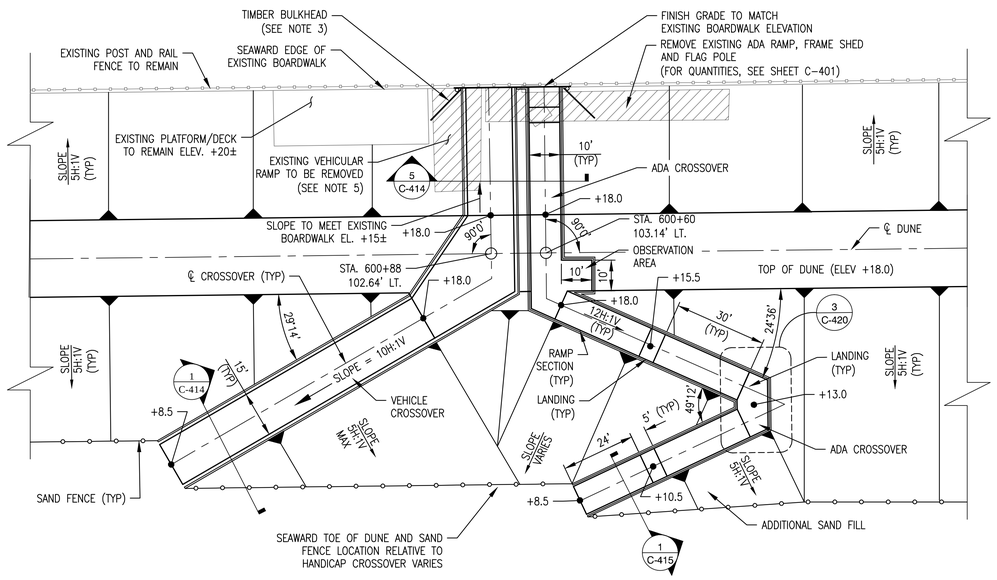

1 PLAN - SEASIDE HEIGHTS (FRANKLIN AVE.)
SCALE: AS SHOWN
20 0 20 40
SCALE IN FEET

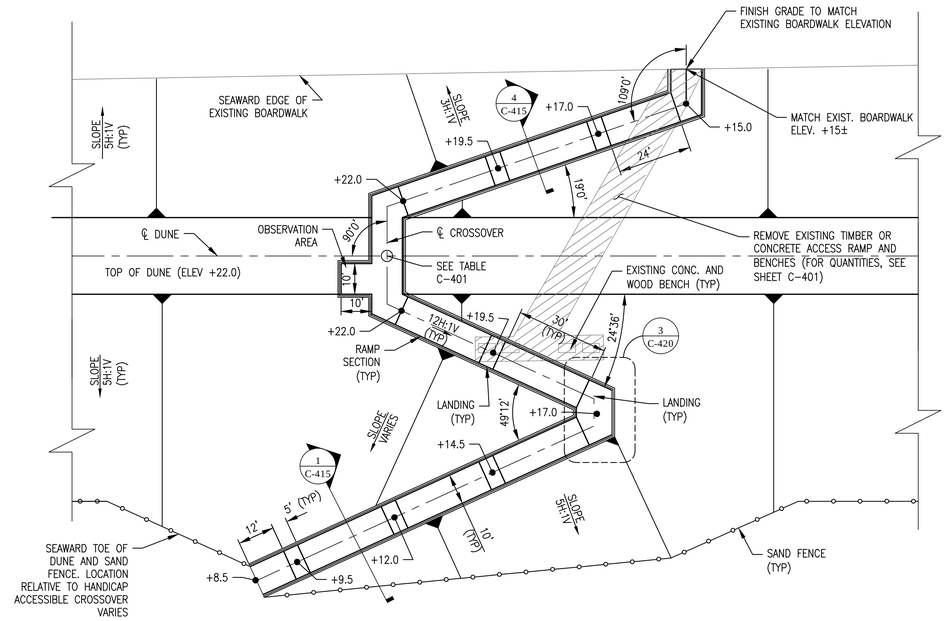

2 PLAN - TYPICAL ADA CROSSOVER (SEASIDE PARK)
SCALE: AS SHOWN
20 0 20 40
SCALE IN FEET

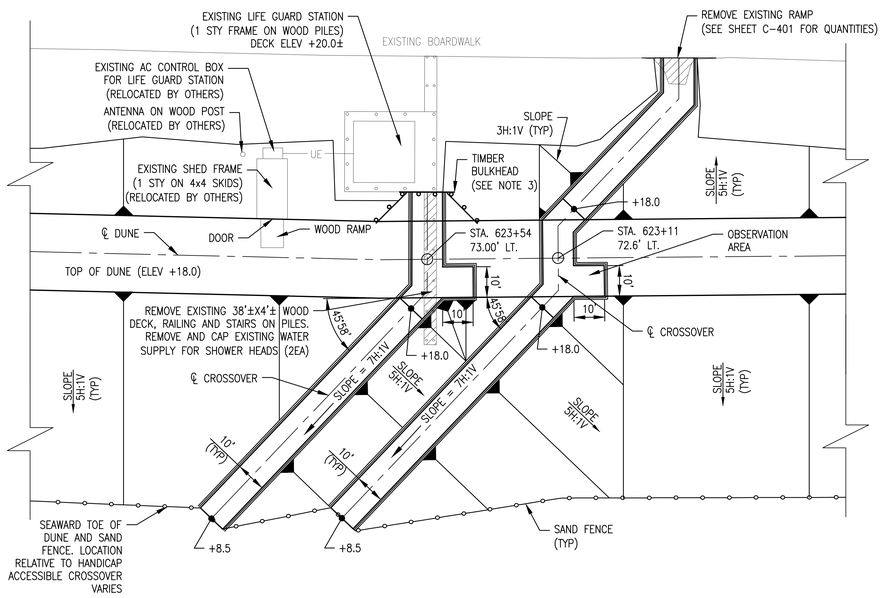

3 PLAN - PEDESTRIAN (SEASIDE PARK - N. ST.)
SCALE: AS SHOWN
20 0 20 40
SCALE IN FEET

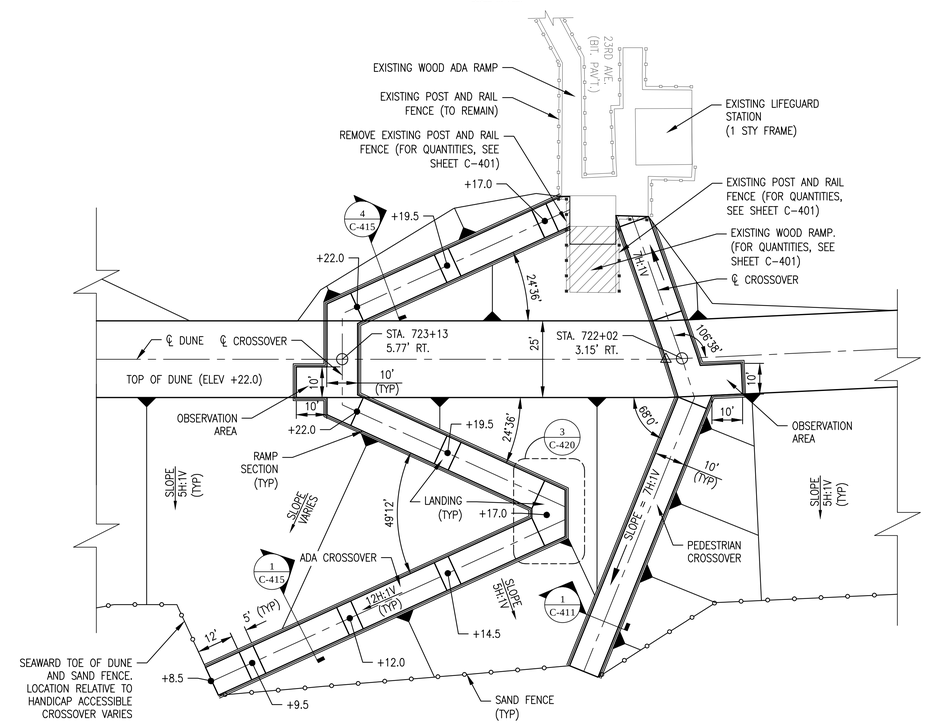

4 PLAN - BERKELEY TOWNSHIP (23RD AVE.)
SCALE: AS SHOWN
20 0 20 40
SCALE IN FEET

NOTES:

1. POST AND RAIL FENCE POSTS NOT SHOWN FOR CLARITY. FOR DETAILS OF POST AND RAIL FENCE, SEE SHEET C-417.
2. FOR SAND FENCE AND DUNE PLANTING DETAILS, SEE SHEET C-419.
3. FOR DETAILS OF TIMBER BULKHEAD, SEE DETAIL 1/ C-418.
4. THE LENGTH OF HANDICAP CROSSOVERS MAY VARY WITH LOCATION AND FINISHED GRADE OR EXISTING GROUND ELEVATIONS. THE RISE ON CROSSOVERS SHALL BE NO MORE THAN 2.5' OVER A RUN OF 30' (12H:1V). LANDING SHALL BE CONSTRUCTED AT A MAXIMUM SPACING OF 30' AND SHALL BE LEVEL FOR A MINIMUM LENGTH OF 5'.

US Army Corps of Engineers Philadelphia District

MARK	DESCRIPTION	DATE	BY

MARK	DESCRIPTION	DATE	BY

U.S. ARMY CORPS OF ENGINEERS
PHILADELPHIA DISTRICT
PHILADELPHIA, PA 19107-3390
www.nap.usace.army.mil

DWN BY: GMG / FGS
DESIGNED BY: ADD
CKD BY: DAN
REVIEWED BY: DAN / BT
ISSUE/RELEASE DATE: 95% REVIEW 08 JUN 2016
PROJ. NUMBER:
SOLICITATION NUMBER: IFB NO. W912BU-14-B-0074
CONTRACT NUMBER:
DWG SCALE: AS SHOWN
DWG. SIZE: 22"X34" ANSI D
FILE NAME: C410 ADA CROSSOVER.dwg

MANASQUAN INLET TO BARNEGAT INLET
OCEAN COUNTY, NEW JERSEY
BEACHFILL
INITIAL CONSTRUCTION
PLANS - CROSSOVER

SHEET NUMBER
C-410

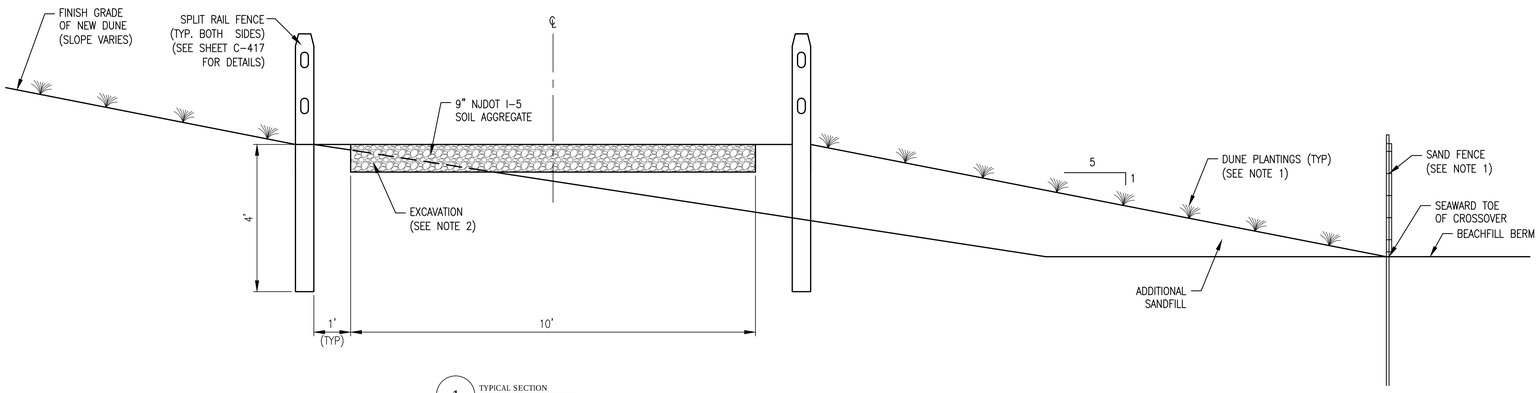

1 TYPICAL SECTION
SCALE: NOT TO SCALE

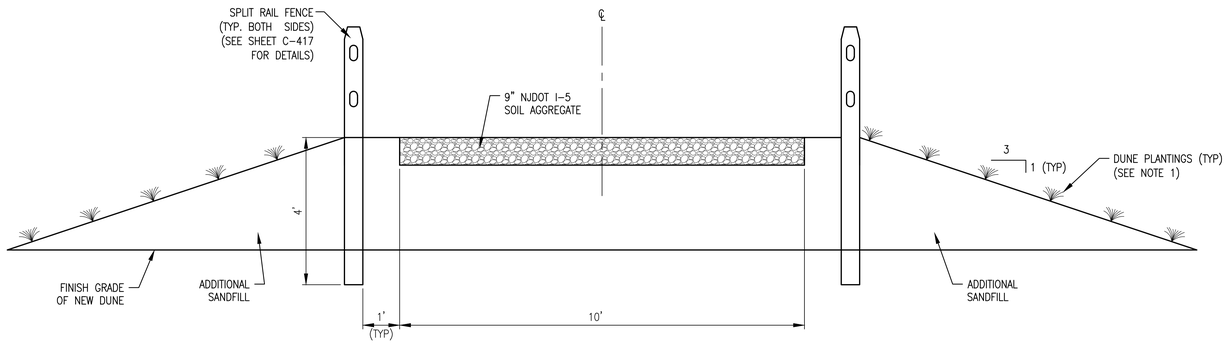

2 TYPICAL SECTION
SCALE: NOT TO SCALE

3 TYPICAL SECTION
SCALE: NOT TO SCALE

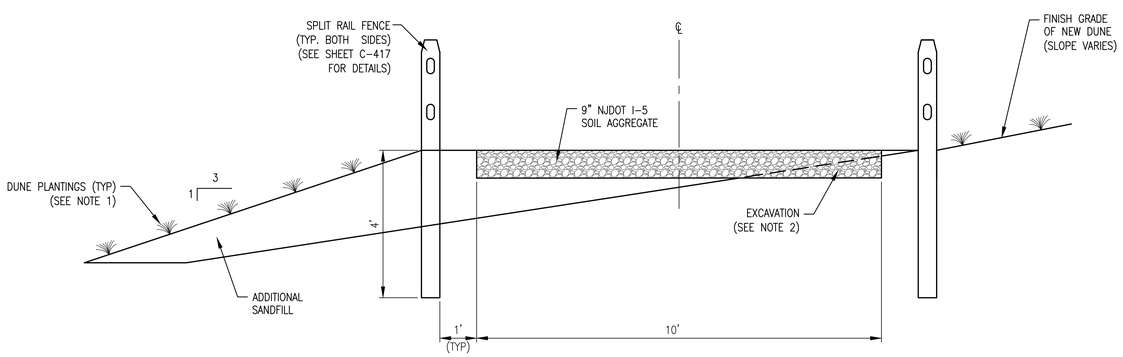

4 TYPICAL SECTION
SCALE: NOT TO SCALE

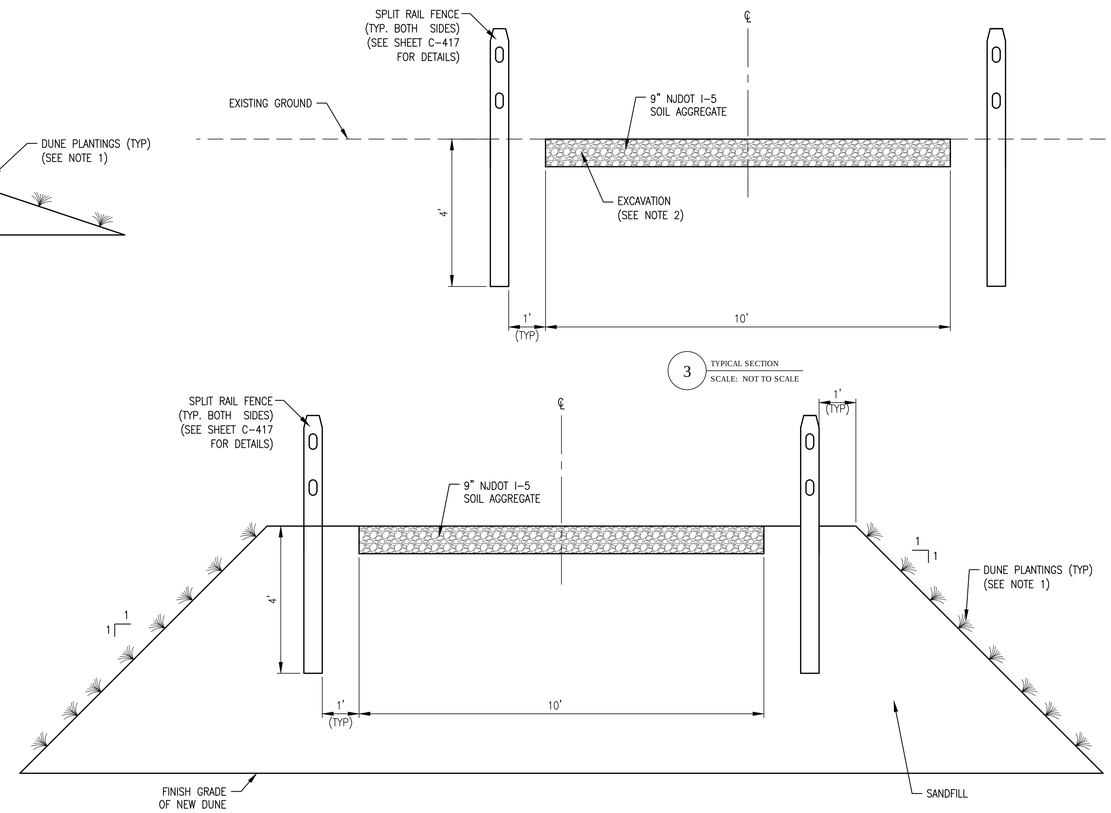

5 TYPICAL SECTION - PEDESTRIAN CROSSOVER (BAYHEAD)
SCALE: NOT TO SCALE

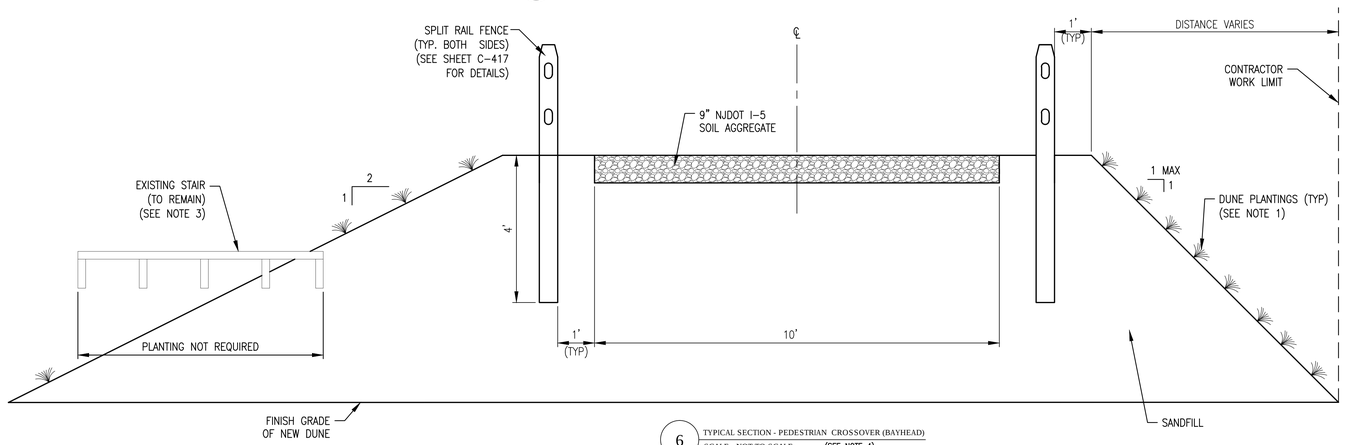

6 TYPICAL SECTION - PEDESTRIAN CROSSOVER (BAYHEAD)
SCALE: NOT TO SCALE (SEE NOTE 4)

NOTES:

1. FOR DUNE PLANTING AND SAND FENCE DETAILS, SEE SHEET C-419.
2. EXCAVATED MATERIAL SHALL BE USED AS ADDITIONAL SAND FILL.
3. EXISTING TRAILING IS NOT SHOWN FOR CLARITY AND SHALL REMAIN IN PLACE.
4. THE TYPICAL SECTION IS APPLICABLE TO EVERY PEDESTRIAN CROSSOVER EXCEPT THE CROSSOVER LOCATED AT OSBORNE AVENUE.

US Army Corps of Engineers
Philadelphia District

MARK	DESCRIPTION	DATE	BY

MARK	DESCRIPTION	DATE	BY

U.S. ARMY CORPS OF ENGINEERS
PHILADELPHIA DISTRICT
PHILADELPHIA, PA 19107-3390
www.nap.usace.army.mil

DESIGNED BY: DCL
DRAWN BY: POS
CKD BY: DAN
REVIEWED BY: DWN TEH
ISSUE/RELEASE DATE: 95% REVIEW 06 JUN 2018
PROJ. NUMBER:
SOLICITATION NUMBER: #B NO. W912BU-18-B-0074
CONTRACT NUMBER:
DWG SCALE: NTS
DWG. SIZE: 22"x34" (ANSI D)
FILE NAME: C411 TYP SECTIONS - PEDESTRIAN CROSSOVER.dwg

MANASQUAN INLET TO BARNEGAT INLET
OCEAN COUNTY, NEW JERSEY
BEACHFILL
INITIAL CONSTRUCTION
TYP SECTIONS - PEDESTRIAN CROSSOVER

SHEET NUMBER
C-411

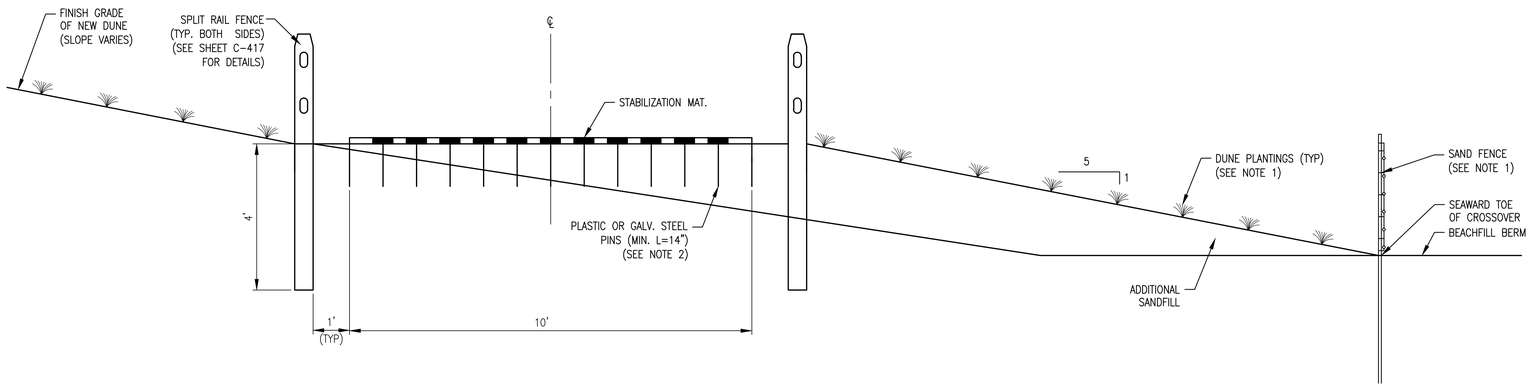

1 TYPICAL SECTION
SCALE: NOT TO SCALE

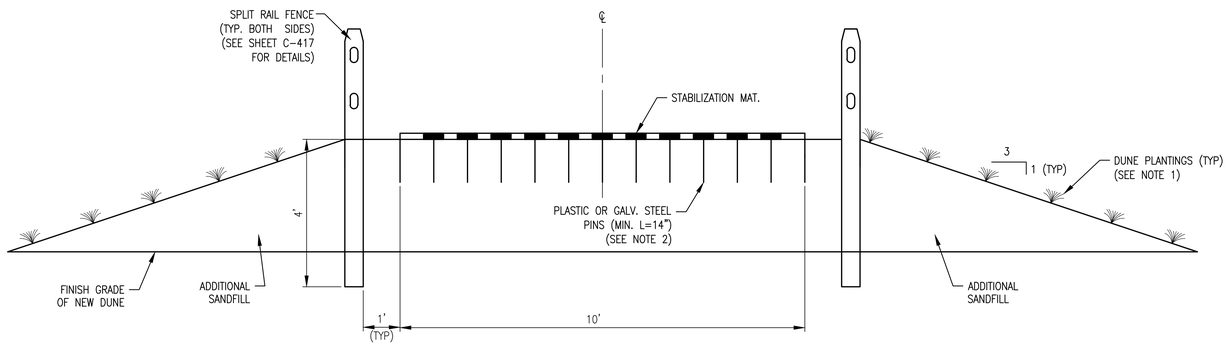

2 TYPICAL SECITON
SCALE: NOT TO SCALE

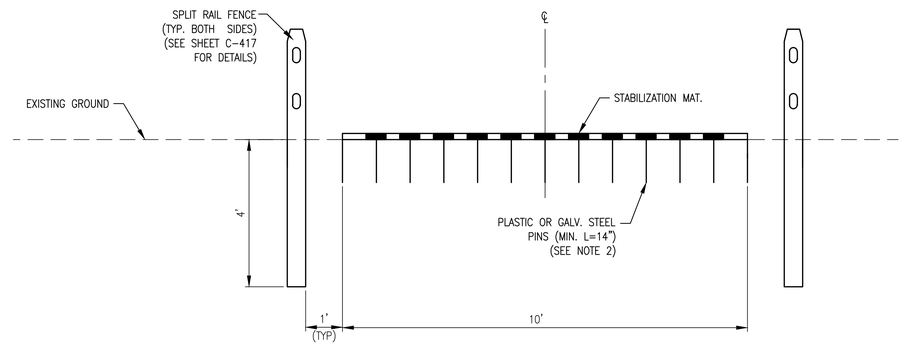

3 TYPICAL SECITON
SCALE: NOT TO SCALE

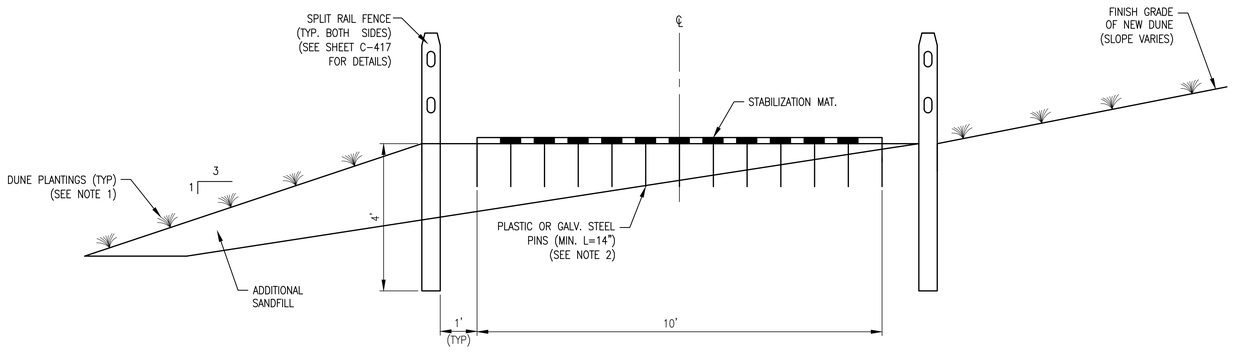

4 TYPICAL SECTION
SCALE: NOT TO SCALE

NOTES:

1. FOR DUNE PLANTING AND SAND FENCE DETAILS, SEE SHEET C-419.
2. SEE CONTRACT SPECIFICATIONS FOR REQUIREMENTS.

US Army Corps of Engineers
Philadelphia District

MARK	ACTION	DESCRIPTION	DATE	BY

MARK	ACTION	DESCRIPTION	DATE	BY

U.S. ARMY CORPS OF ENGINEERS
PHILADELPHIA DISTRICT
PHILADELPHIA, PA 19107-3390
www.nap.usace.army.mil

DWN BY: PGS
CKD BY: DAN
DESIGNED BY: DCL
REVIEWED BY: DWK/TEH
DWG SCALE: NTS
DWG. SIZE: 30"x42" Arch E
ISSUE/RELEASE DATE: 95% REVIEW / 06 JUN 2016
PROJ. NUMBER: -
SOLICITATION NUMBER: IFB NO. W912BU-16-B-0014
CONTRACT NUMBER: -
FILE NAME: C-412 TYP SECTIONS - PEDESTRIAN CROSSOVER.dwg

MANASQUAN INLET TO BARNEGAT INLET
OCEAN COUNTY, NEW JERSEY
BEACHFILL
INITIAL CONSTRUCTION
TYP SECTIONS - PEDESTRIAN CROSSOVER
-

SHEET NUMBER
C-412

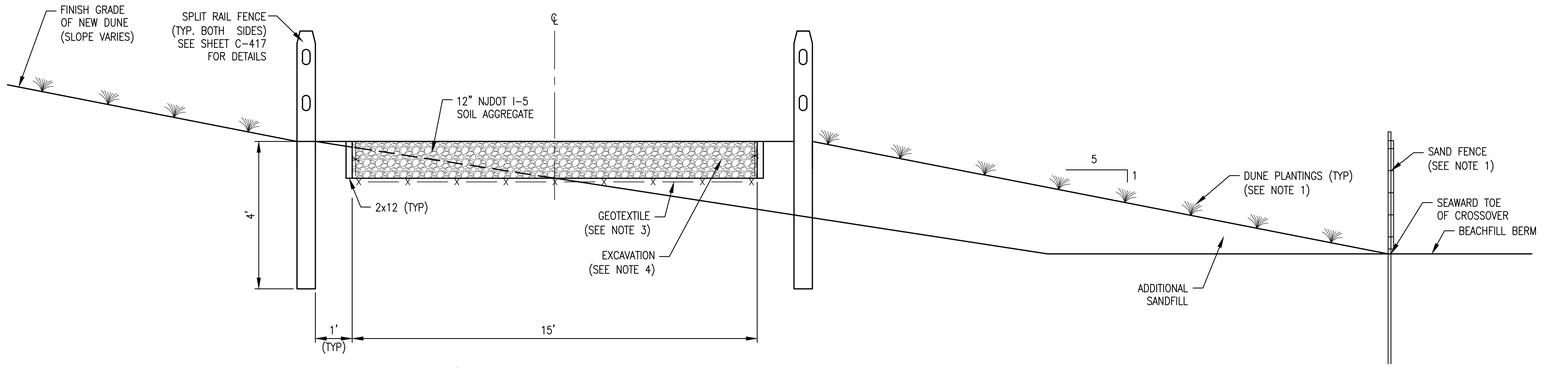

1 TYPICAL SECTION
SCALE: NOT TO SCALE

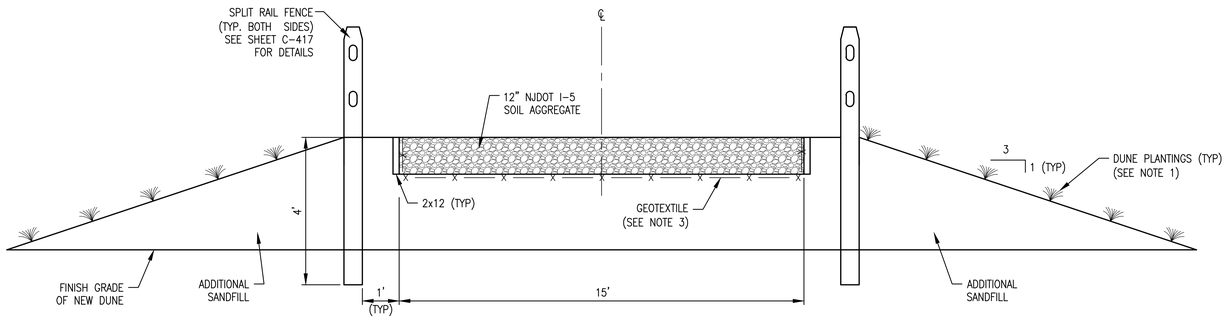

2 TYPICAL SECTION
SCALE: NOT TO SCALE

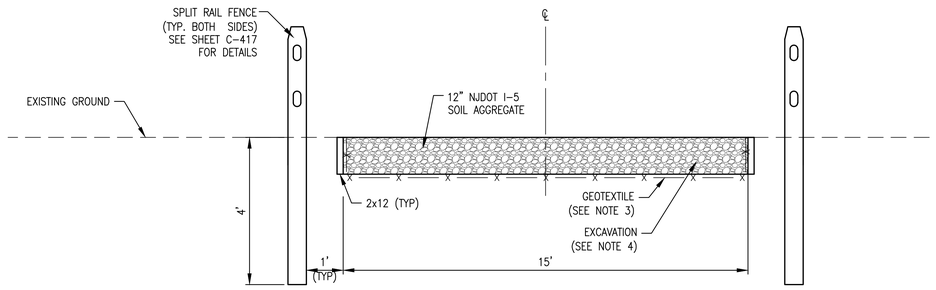

3 TYPICAL SECTION
SCALE: NOT TO SCALE

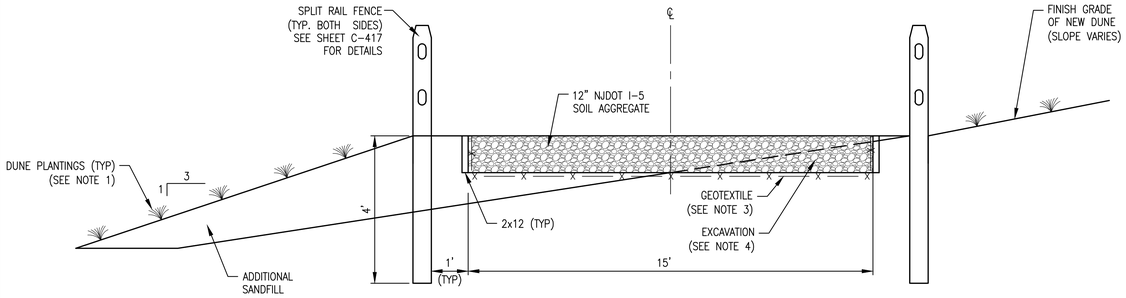

4 TYPICAL SECTION
SCALE: NOT TO SCALE

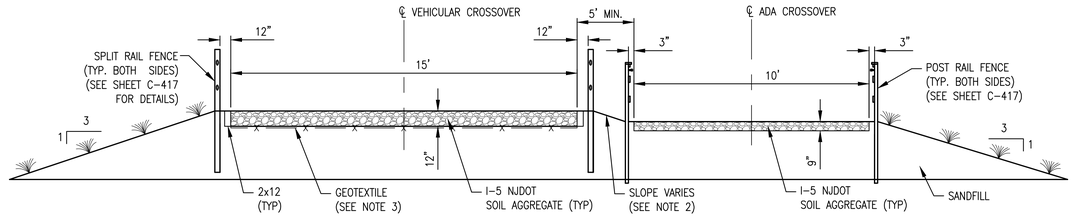

5 TYPICAL SECTION
SCALE: NOT TO SCALE

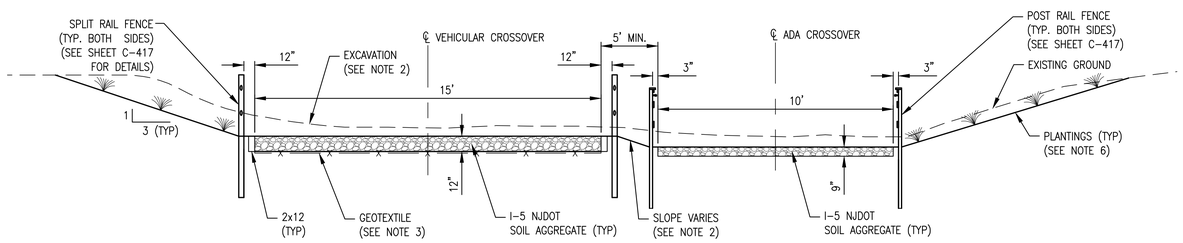

6 TYPICAL SECTION
SCALE: NOT TO SCALE

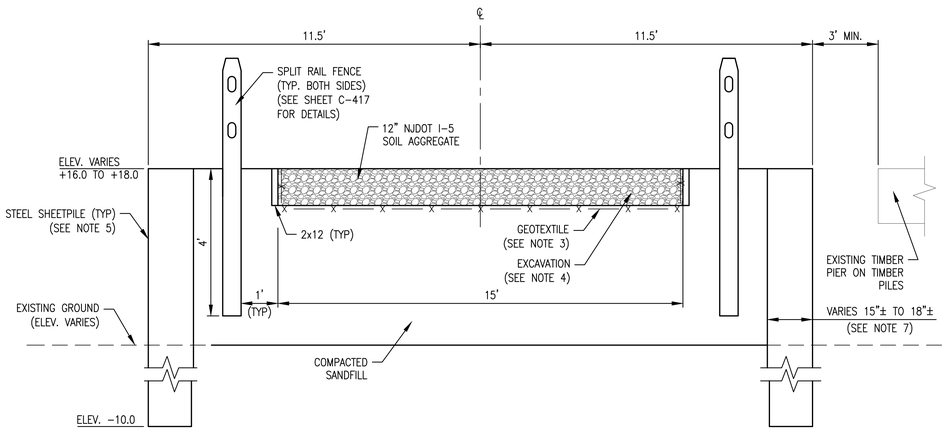

7 TYPICAL SECTION - SEASIDE HEIGHTS (GRANT AVENUE)
SCALE: NOT TO SCALE

NOTES:

1. FOR DUNE PLANTING AND SAND FENCE DETAILS, SEE SHEET C-419.
2. SLOPE MAY BE POSITIVE OR NEGATIVE MAX. SLOPE 3H:1V.
3. THE CONTRACTOR SHALL PLACE GEOTEXTILE ¾ OF THE WAY UP THE SURFACE OF THE I-5 MATERIAL.
4. EXCAVATED MATERIAL SHALL BE USED AS ADDITIONAL SANDFILL.
5. FOR REQUIREMENTS, SEE CONTRACT SPECIFICATIONS.
6. USE DETAIL 4 ON SHEET C-419 FOR SLOPE PLANTINGS.
7. WIDTH VARIES DEPENDING ON THE MANUFACTURER FOR REQUIREMENTS, SEE CONTRACT SPECIFICATIONS.

US Army Corps of Engineers
Philadelphia District

MARK	ACTION	DATE	BY

MARK	DESCRIPTION	DATE	BY

DESIGNED BY: DCL	ISSUE/RELEASE DATE: 95% REVIEW / 06 JUL 2016		
REVIEWED BY: DWR/TEB	PROJ. NUMBER:		
DRAWN BY: PGS	SOLICITATION NUMBER: IFB NO. W912BJ-16-B-2014		
CKD BY: DAA	CONTRACT NUMBER:		
DWG. SCALE: NTS	FILE NAME: 2014ZJ-E05-E1 (24X36)TYPICAL SECTIONS - VEHICLE CROSSOVER.dwg		
DWG. SIZE: 36"x24" ANSI-E			

U.S. ARMY CORPS OF ENGINEERS
PHILADELPHIA DISTRICT
PHILADELPHIA, PA 19107-3390
www.nap.usace.army.mil

MANASQUAN INLET TO BARNEGAT INLET
OCEAN COUNTY, NEW JERSEY
BEACHFILL
INITIAL CONSTRUCTION
TYPICAL SECTIONS - VEHICLE CROSSOVER

SHEET NUMBER
C-414

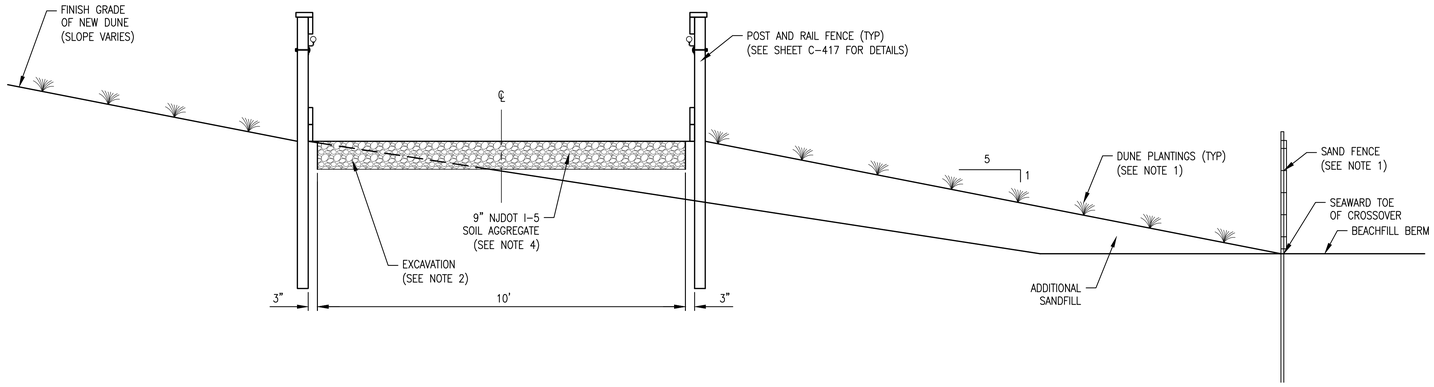

1 TYPICAL SECTION
SCALE: NOT TO SCALE

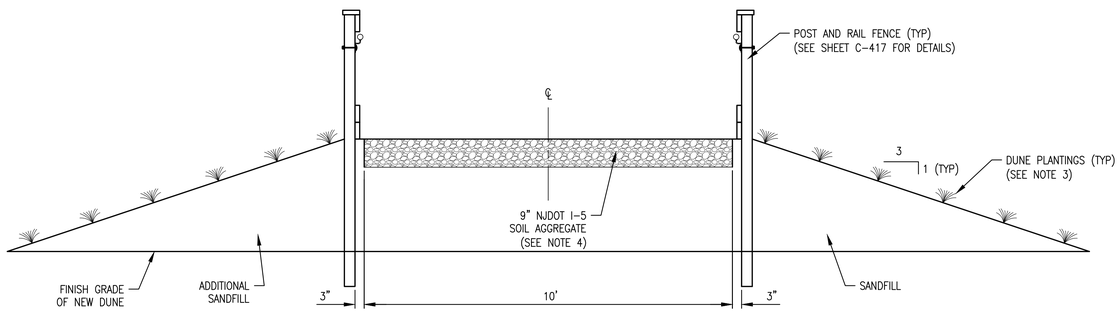

2 TYPICAL SECTION
SCALE: NOT TO SCALE

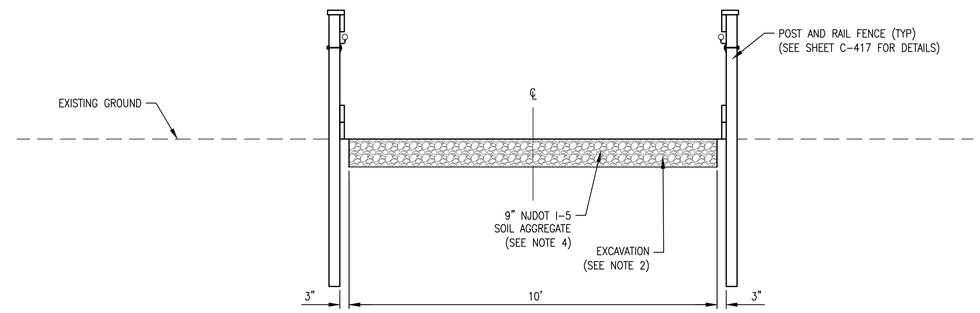

3 TYPICAL SECTION
SCALE: NOT TO SCALE

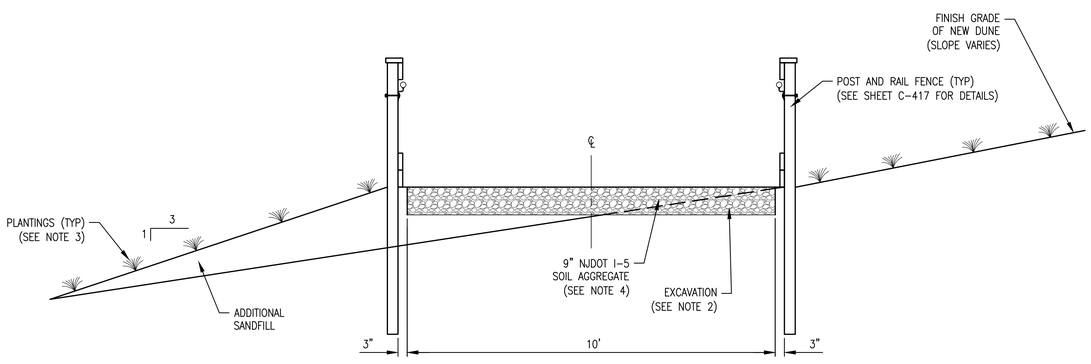

4 TYPICAL SECTION
SCALE: NOT TO SCALE

NOTES:

1. FOR DUNE PLANTING AND SAND FENCE DETAILS, SEE SHEET C-419.
2. EXCAVATED MATERIAL SHALL BE USED AS ADDITIONAL SANDFILL.
3. USE DETAIL 4 ON SHEET C-419 FOR SLOPE PLANTINGS.
4. THE CROSSOVER SURFACE IN SOIL AGGREGATE TOMS RIVER SHALL BE I-5 AND STABILIZATION MAT.

US Army Corps of Engineers
Philadelphia District

MARK	ACTION	DESCRIPTION	DATE	BY
-	-	-	-	-
-	-	-	-	-
-	-	-	-	-
-	-	-	-	-
-	-	-	-	-
-	-	-	-	-

MARK	ACTION	DESCRIPTION	DATE	BY
-	-	-	-	-
-	-	-	-	-
-	-	-	-	-
-	-	-	-	-
-	-	-	-	-
-	-	-	-	-

U.S. ARMY CORPS OF ENGINEERS
PHILADELPHIA DISTRICT
PHILADELPHIA, PA 19107-3390
www.nap.usace.army.mil

DWN BY: PGS
CKD BY: DAN
DESIGNED BY: DCL
REVIEWED BY: DWK TEH
DWG SCALE: NTS
DWG. SIZE: 30"X42" ANSI E
ISSUE/RELEASE DATE: 95% REVIEW / 06 JUN 2016
PROJ. NUMBER: -
SOLICITATION NUMBER: IFB NO. W912BU-16-B-0014
CONTRACT NUMBER: -
FILE NAME: C-415 TYP SECTIONS - ADA ACCESSIBLE CROSSOVER.dwg

MANASQUAN INLET TO BARNEGAT INLET
OCEAN COUNTY, NEW JERSEY
BEACHFILL
INITIAL CONSTRUCTION
TYP SECTIONS - ADA CROSSOVER

SHEET NUMBER
C-415

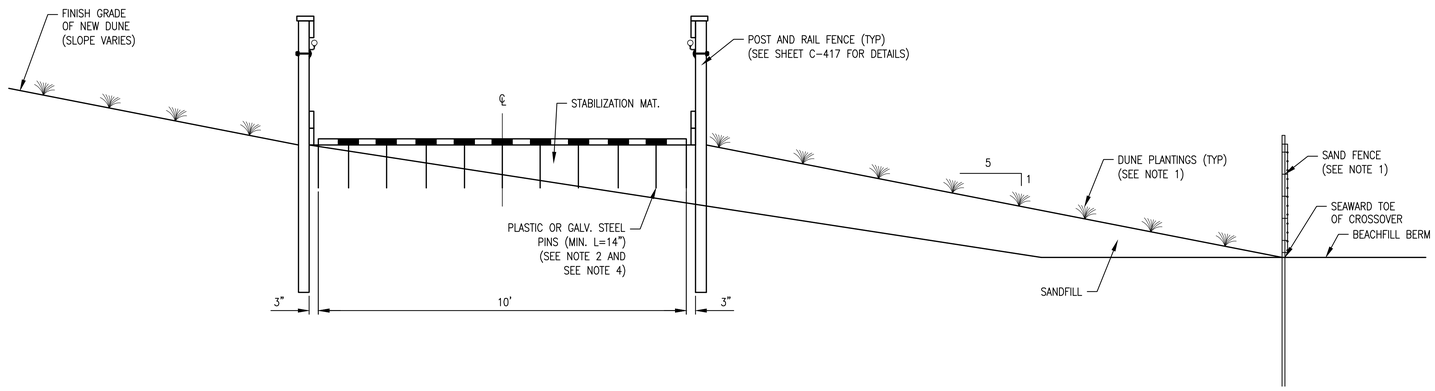

1 TYPICAL SECTION
SCALE: NOT TO SCALE

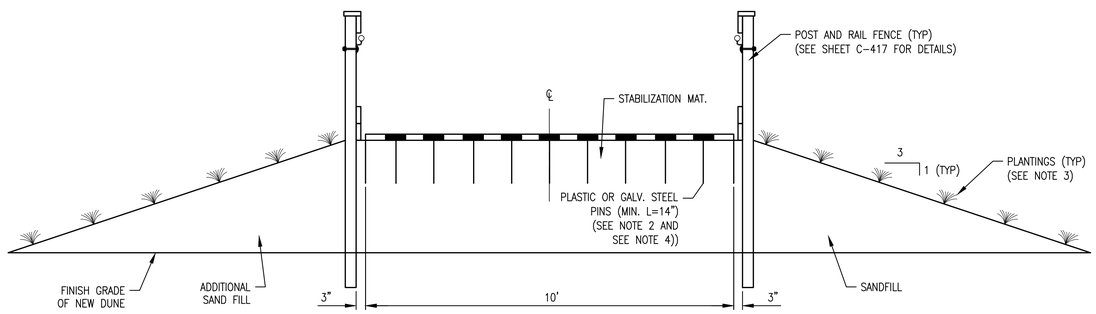

2 TYPICAL SECTION
SCALE: NOT TO SCALE

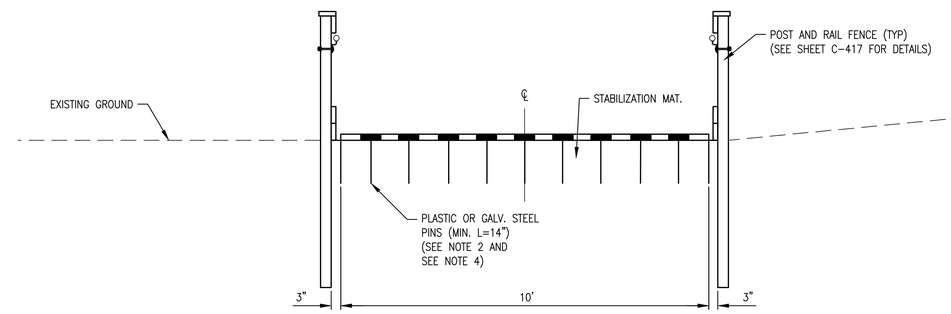

3 TYPICAL SECTION
SCALE: NOT TO SCALE

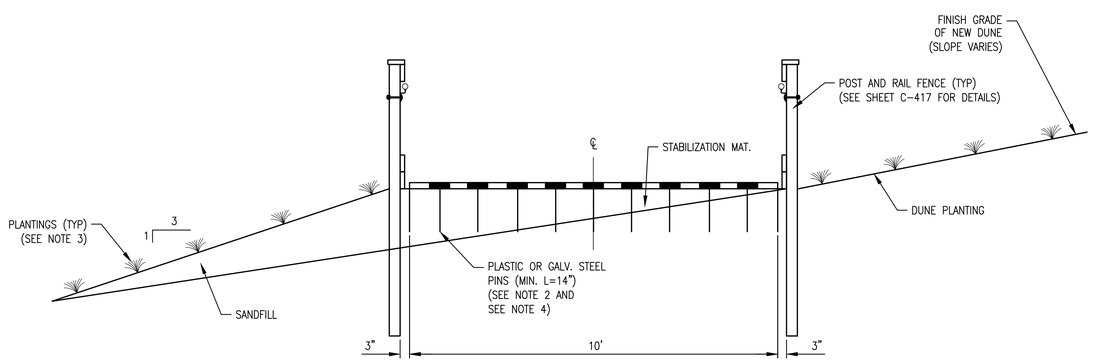

4 TYPICAL SECTION
SCALE: NOT TO SCALE

NOTES:

1. FOR DUNE PLANTING AND SAND FENCE DETAILS, SEE SHEET C-419.
2. SEE CONTRACT SPECIFICATIONS FOR REQUIREMENTS.
3. USE DETAIL 4 ON SHEET C-419 FOR SLOPE PLANTINGS.
4. THE CROSSOVER SURFACE IN TOMS RIVER TOWNSHIP SHALL BE I-5 SOIL AGGREGATE AND STABILIZATION MAT.

US Army Corps of Engineers
Philadelphia District

MARK	ACTION	DATE	BY	DESCRIPTION

MARK	ACTION	DATE	BY	DESCRIPTION

U.S. ARMY CORPS OF ENGINEERS
PHILADELPHIA DISTRICT
PHILADELPHIA, PA 19107-3390
www.nap.usace.army.mil

DWN BY: PCS
CKD BY: DAN
DESIGNED BY: DCL
REVIEWED BY: DWN, TES
ISSUE/RELEASE DATE: 95% REVIEW | 06 JUN 2016
PROJ. NUMBER:
SOLICITATION NUMBER: IFB NO. W912BJ-16-B-2014
CONTRACT NUMBER:
DWG. SCALE: NTS
DWG. SIZE: 36"x22"ANSI E
FILE NAME: 01 TYP SECTIONS - ADA ACCESSIBLE CROSSOVER.dwg

MANASQUAN INLET TO BARNEGAT INLET
OCEAN COUNTY, NEW JERSEY
BEACHFILL
INITIAL CONSTRUCTION
TYP SECTIONS - ADA CROSSOVER

SHEET NUMBER
C-416

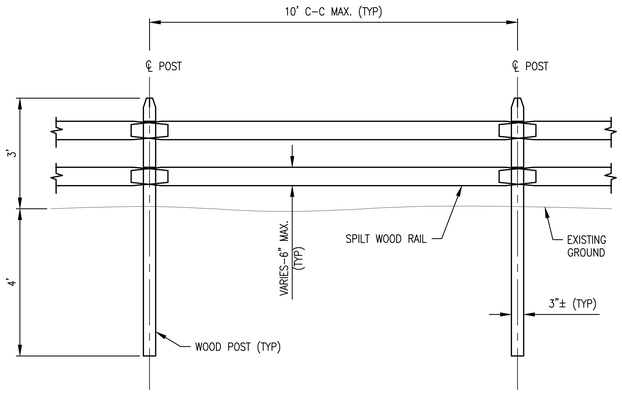

1 ELEVATION - SPLIT RAIL FENCE
SCALE: NOT TO SCALE

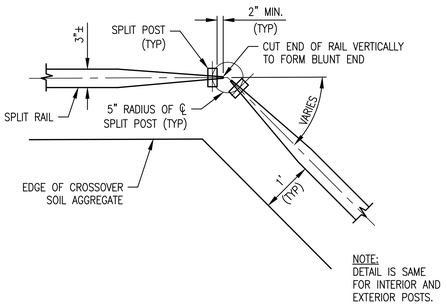

2 DETAIL - SPLIT RAIL FENCE POST LAYOUT AT HORIZONTAL ANGLE POINT
SCALE: NOT TO SCALE

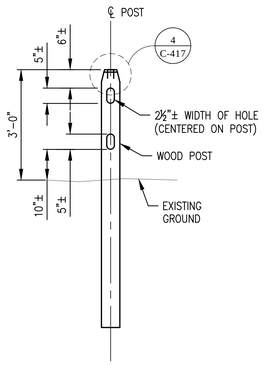

3 DETAIL - SPLIT RAIL FENCE
SCALE: NOT TO SCALE

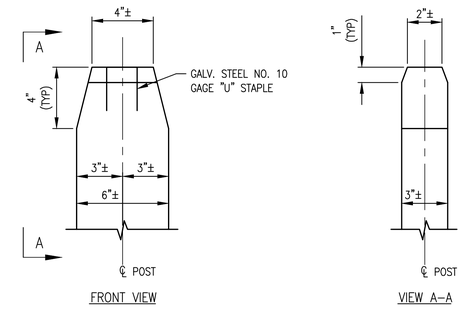

4 DETAIL - TOP OF SPLIT RAIL FENCE POST TAPER
SCALE: NOT TO SCALE

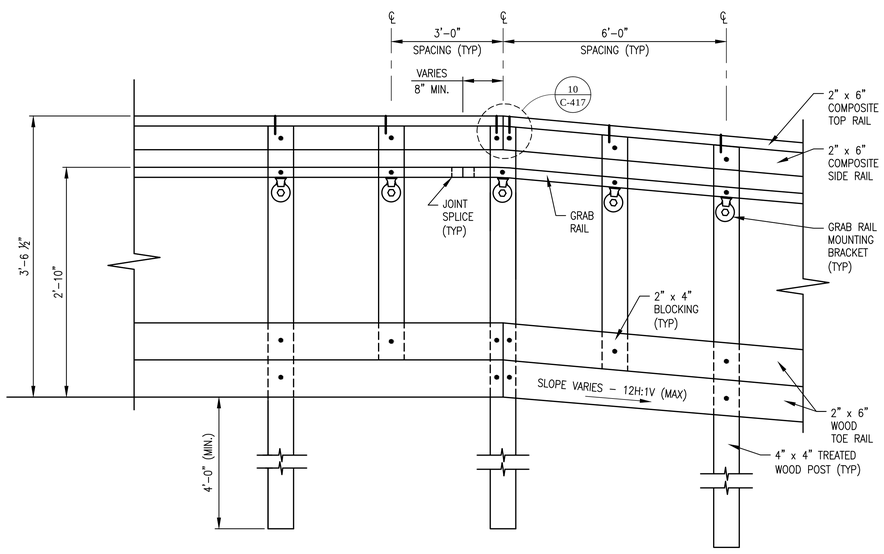

5 ELEVATION - POST AND RAIL FENCE
SCALE: NOT TO SCALE

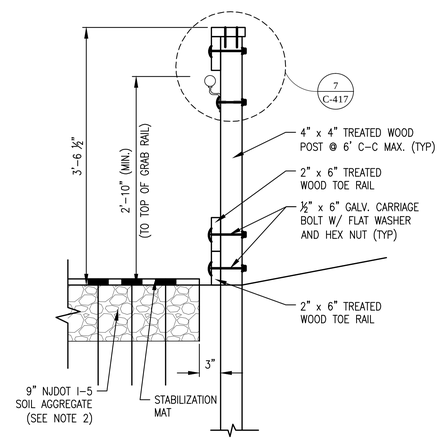

6 DETAIL - POST AND RAIL FENCE
SCALE: NOT TO SCALE

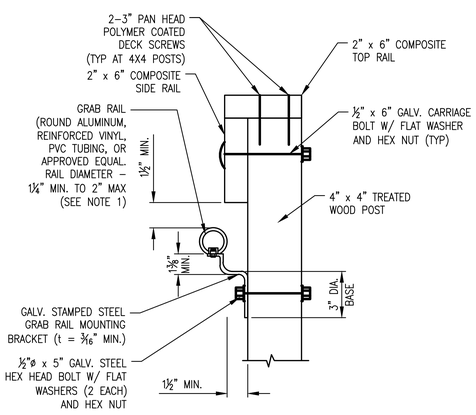

7 DETAIL - GRAB RAIL MOUNTING BRACKET TO POST
SCALE: NOT TO SCALE

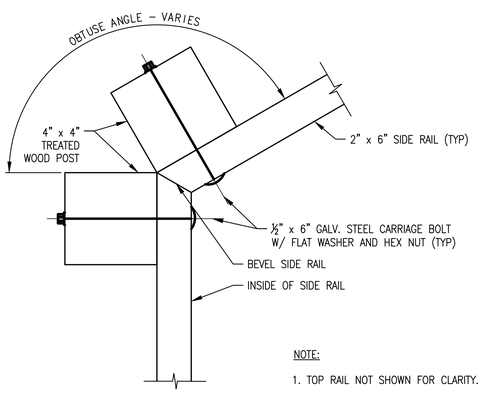

NOTE:

1. TOP RAIL NOT SHOWN FOR CLARITY.

8 DETAIL - POST AND RAIL FENCE RAILING WITH OBTUSE HOR. ANGLE ALIGNMENT
SCALE: NOT TO SCALE

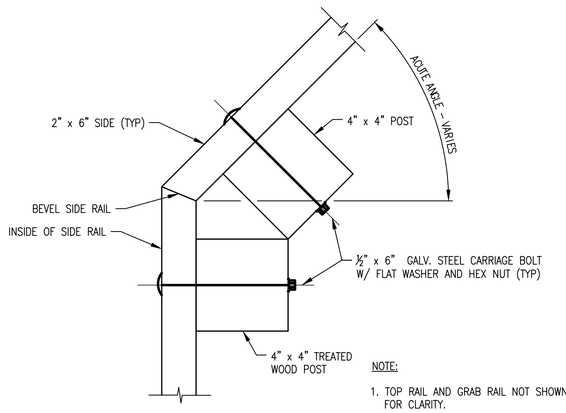

NOTE:

1. TOP RAIL AND GRAB RAIL NOT SHOWN FOR CLARITY.

9 DETAIL - POST AND RAIL FENCE RAILING WITH ACUTE HOR. ANGLE ALIGNMENT
SCALE: NOT TO SCALE

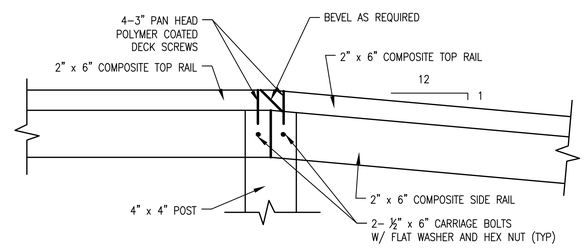

10 DETAIL - POST AND RAIL FENCE RAIL SPLICE
SCALE: NOT TO SCALE

NOTES:

1. THE DIMENSION MAY VARY, BUT 1½" MINIMUM CLEAR IS REQUIRED BETWEEN THE O.D. OF THE GRAB RAIL AND FACE OF POST TO MEET ADA REGULATIONS.
2. CROSSOVER SURFACE MAY BE I-5 SOIL AGGREGATE OR STABILIZATION MAT. FOR ALL COMMUNITIES EXCEPT FOR TOMS RIVER TOWNSHIP WHICH WILL HAVE BOTH SURFACES. SEE CROSSOVER KEY OR OPTION CROSSOVER KEY ON PLAN SHEETS.

US Army Corps of Engineers
Philadelphia District

MARK	DESCRIPTION	DATE	BY

MARK	DESCRIPTION	DATE	BY

U.S. ARMY CORPS OF ENGINEERS
PHILADELPHIA DISTRICT
PHILADELPHIA, PA 19107-3390
www.nap.usace.army.mil

DWN BY: GMG / PSB
DESIGNED BY: DCL
ISSUE/RELEASE DATE: 9/01/18;REVIEW 06JUN2018
CKD BY: DJA
REVIEWED BY: DWN / DTI
PROJ. NUMBER: -
SOLICITATION NUMBER: #B NO. W912BU-18-B-0074
DWG. SCALE: NTS
CONTRACT NUMBER: -
DWG. SIZE: 30"x42" ANSI E
FILE NAME: C417-DETAILS-FENCE.dwg

MANASQUAN INLET TO BARNEGAT INLET
OCEAN COUNTY, NEW JERSEY
BEACHFILL
INITIAL CONSTRUCTION
DETAILS - FENCE

SHEET NUMBER
C-417

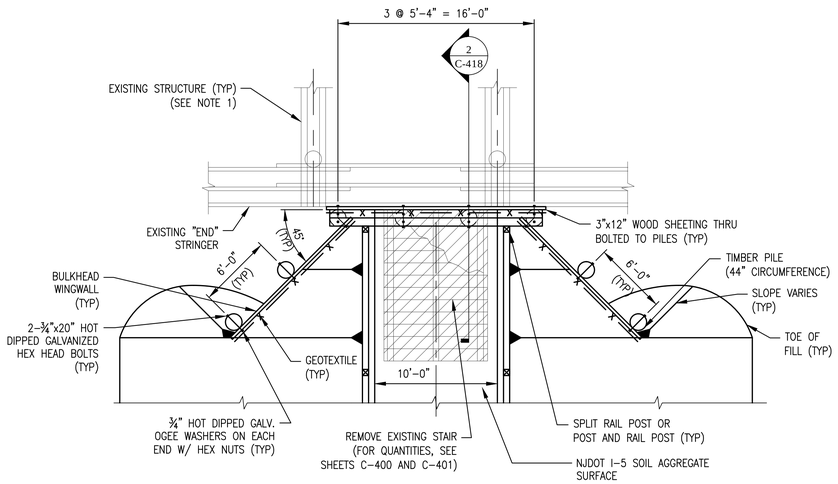

1 PLAN - TIMBER BULKHEAD
SCALE: AS SHOWN
5 0 5 10
SCALE IN FEET

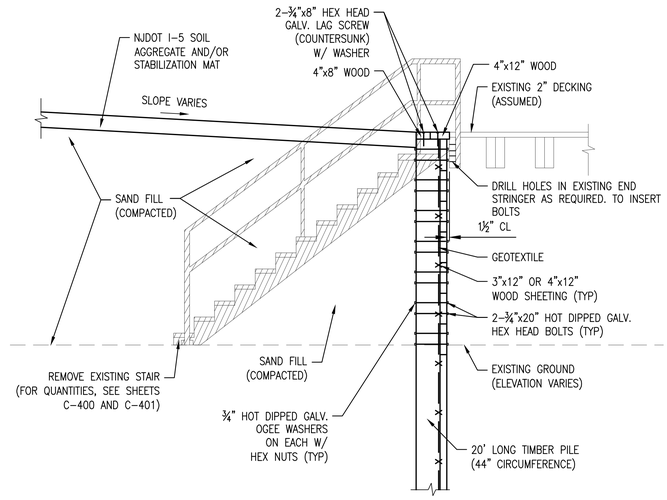

2 SECTION
SCALE: AS SHOWN
3 0 3 6
SCALE IN FEET

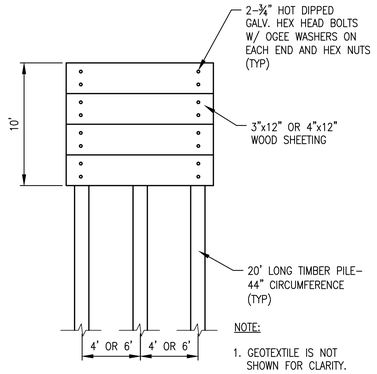

3 ELEVATION - BULKHEAD WING WALL
SCALE: AS SHOWN
5 0 5 10
SCALE IN FEET

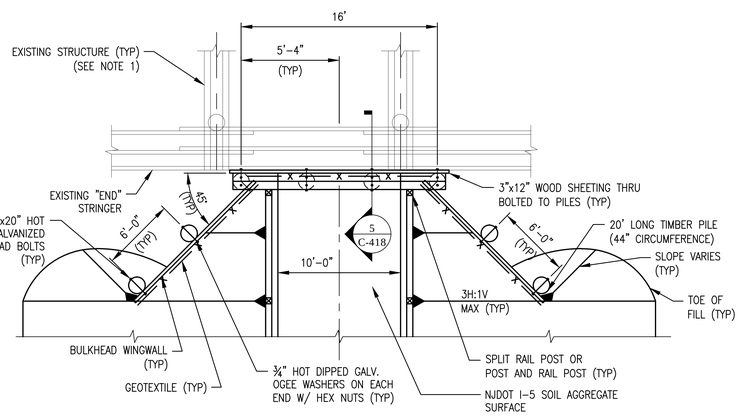

4 PLAN - PEDESTRIAN CROSSOVER OR HANDICAP CROSSOVER TIMBER BULKHEAD
SCALE: AS SHOWN
5 0 5 10
SCALE IN FEET

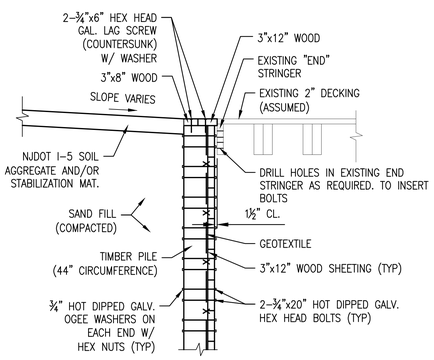

5 SECTION
SCALE: AS SHOWN
3 0 3 6
SCALE IN FEET

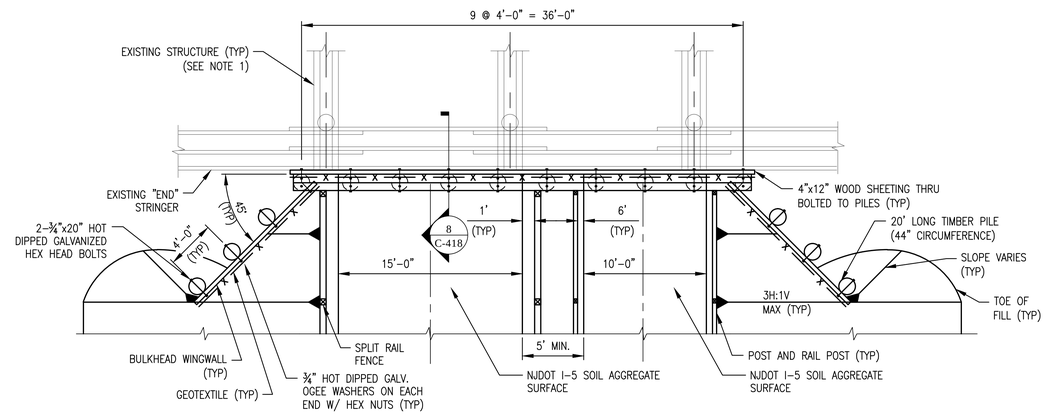

6 PLAN - COMBINATION VEHICLE CROSSOVER WITH HANDICAP CROSSOVER BULKHEAD
SCALE: AS SHOWN
5 0 5 10
SCALE IN FEET

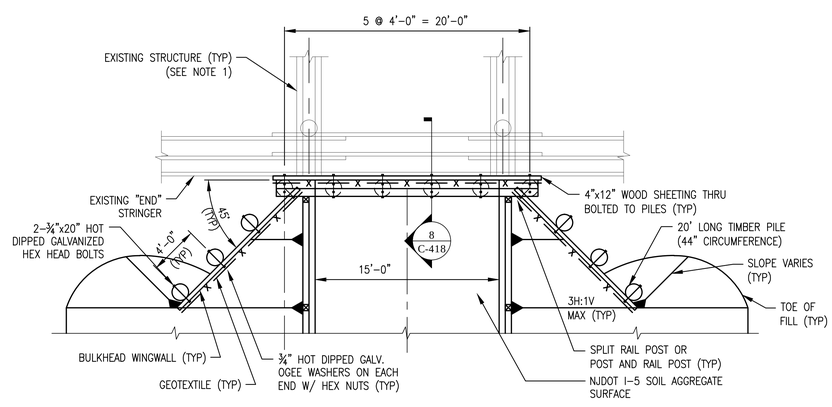

7 PLAN - VEHICLE CROSSOVER WITH TIMBER BULKHEAD
SCALE: AS SHOWN
5 0 5 10
SCALE IN FEET

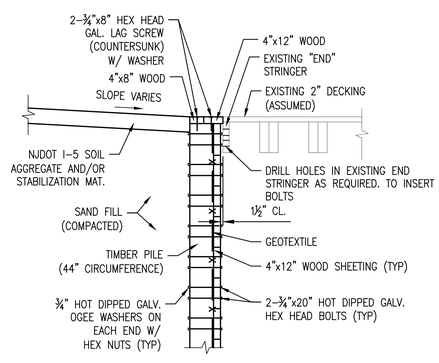

8 SECTION
SCALE: AS SHOWN
3 0 3 6
SCALE IN FEET

NOTES:

1. EXISTING BOARDWALK IS SHOWN FOR ILLUSTRATION PURPOSES ONLY AND DECKING IS NOT SHOWN FOR CLARITY. THE TYPE OF STRUCTURE VARIES AND MAY BE A BOARDWALK, PAVILION, VIEWING PLATFORM OR WALKWAY. THE DESIGNS WILL VARY FOR THE MUNICIPALITIES WITHIN THE PROJECT LIMITS. THE PROPOSED STRUCTURE WILL TIE INTO THE EXISTING STRUCTURE FOR ACCESS BUT THE DESIGN AND CONSTRUCTION OF THE PROPOSED CROSSOVERS ARE WHOLLY INDEPENDENT. THE CROSSOVER LOCATION MAY BE FIELD ADJUSTED AS REQUIRED SO THAT PROPOSED PILES ARE OFFSET FROM EXISTING PILE BENTS OR PILES. ALL FIELD ADJUSTMENTS SHALL BE APPROVED BY THE COR.
2. ALL LUMBER DIMENSIONS ARE NOMINAL.
3. GEOTEXTILE IS OFFSET FOR CLARITY.
4. THE STAIR SHOWN IS FOR ILLUSTRATION ONLY. THE DESIGNS WILL VARY FOR THE MUNICIPALITIES WITHIN THE PROJECT LIMITS.
5. THE CROSSOVER LOCATION MAY BE FIELD ADJUSTED AS REQUIRED SO THAT PROPOSED PILES WILL FIT BETWEEN EXISTING STAIR STRINGERS. ALL FIELD ADJUSTMENTS SHALL BE APPROVED BY THE COR.

US Army Corps of Engineers
Philadelphia District

MARK	ACTION	DATE	BY	DESCRIPTION

MARK	ACTION	DATE	BY	DESCRIPTION

U.S. ARMY CORPS OF ENGINEERS
PHILADELPHIA DISTRICT
PHILADELPHIA, PA 19107-3390
www.nap.usace.army.mil

DESIGNED BY: DCL
REVIEWED BY: DWR, TEB
DRAWN BY: PCS
CKD BY: DAA
ISSUE/RELEASE DATE: 905.REVIEW1 06 JUL 2016
PROJ. NUMBER:
SOLICITATION NUMBER: IFB NO. W912EJ-16-B-0014
CONTRACT NUMBER:
DWG SCALE: AS SHOWN
DWG. SIZE: 22"x34" ANSI-E
FILE NAME: C418 DETAILS-BULKHEAD.dwg

MANASQUAN INLET TO BARNEGAT INLET
OCEAN COUNTY, NEW JERSEY
BEACHFILL
INITIAL CONSTRUCTION
DETAILS - BULKHEAD

SHEET NUMBER
C-418

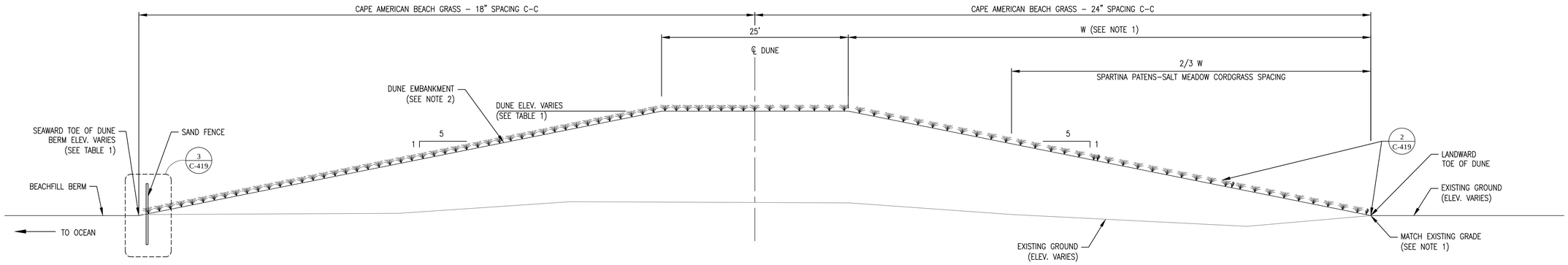

TABLE 1		
STATION RANGE	TOP OF DUNE ELEVATION (FT. NAVD)	TOP OF BERM ELEVATION (FT. NAVD)
00+00 TO 50+00	+18	+11.5
50+00 TO 50+13.3	TRANSITION	TRANSITION
53+13.3 TO 566+98	+22	+8.5
566+98 TO 567+18	TRANSITION	+8.5
567+18 TO 605+05	+18	+8.5
614+32 TO 726+07	+22	+8.5

NOTE:

1. IN AREAS OF EXISTING DUNES, FULL DUNE CONSTRUCTION SHOWN HERE MAY NOT BE REQUIRED. SEE BEACHFILL CROSS SECTION SHEETS. PLANTING IS NOT REQUIRED ON EXISTING DUNES.
2. DUNE EMBANKMENT WIDTH VARIES TOE–TO–TOE.

1 DETAIL - DUNE PLANTING
SCALE: NOT TO SCALE

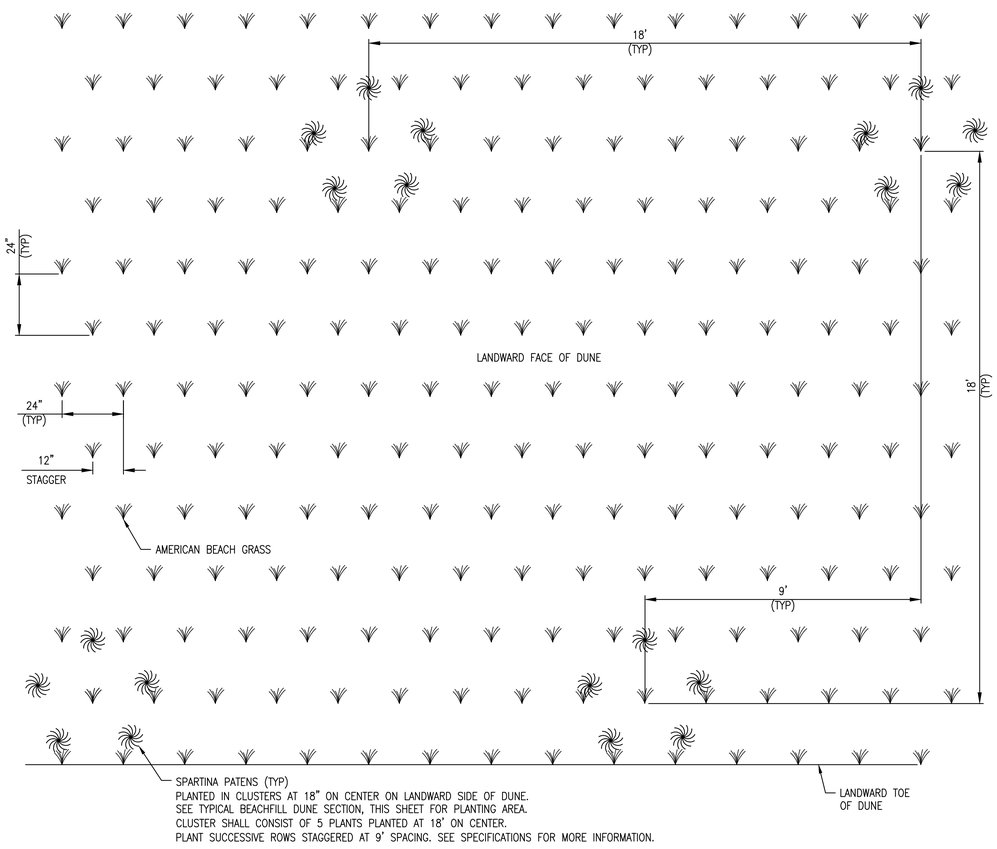

2 DETAIL - LANDWARD FACE OF DUNE GRASS PLANTING LAYOUT
SCALE: AS SHOWN

5 0 5 10
SCALE IN FEET

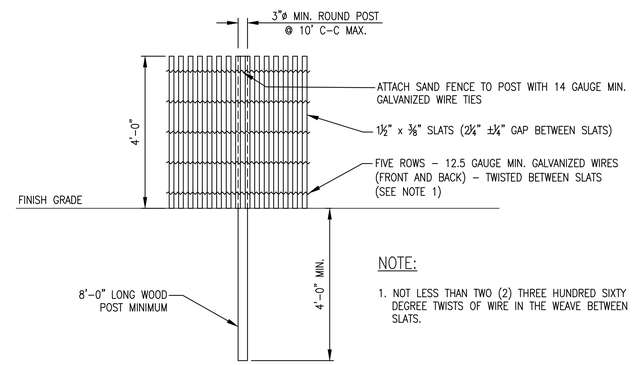

NOTE:

1. NOT LESS THAN TWO (2) THREE HUNDRED SIXTY DEGREE TWISTS OF WIRE IN THE WEAVE BETWEEN SLATS.

3 DETAIL - SAND FENCE WITH POST
SCALE = NOT TO SCALE

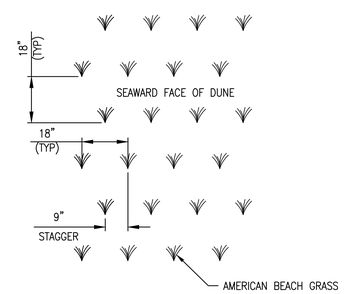

4 DETAIL - SEAWARD FACE OF DUNE GRASS PLANTING LAYOUT
SCALE = NOT TO SCALE

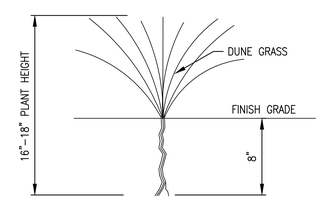

5 DETAIL - DUNE GRASS PLANTING (CAPE AMERICAN BEACH GRASS)
SCALE = NOT TO SCALE

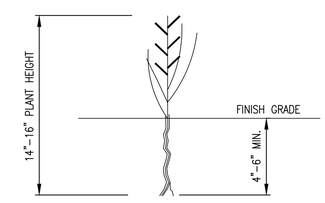

6 DETAIL - DUNE GRASS PLANTING (SPARTINA PATENS-SALT MEADOW CORDGRASS)
SCALE: NOT TO SCALE

US Army Corps of Engineers
Philadelphia District

MARK	ACTION	DATE	BY	DESCRIPTION	DATE	BY

U.S. ARMY CORPS OF ENGINEERS
PHILADELPHIA DISTRICT
PHILADELPHIA, PA 19107-3390
www.nap.usace.army.mil

DWN BY: GMG / PGS
CKD BY: DCL
DSGN BY: DCL
DWG. SCALE: AS SHOWN
DWG. SIZE: 22"X34"
DESIGNED BY: DCL
ENV. REVIEWED BY: DWR / TEB
ISSUE/RELEASE DATE: 9/01/16 REV / 08 JUN 2016
PROJ. NUMBER:
SOLICITATION NUMBER: B0 NO. WP/B0-14-9014
CONTRACT NUMBER:
FILE NAME: C-419 DETAILS - DUNE PLANTING AND SAND FENCE.dgn

MANASQUAN INLET TO BARNEGAT INLET
OCEAN COUNTY, NEW JERSEY
BEACHFILL
INITIAL CONSTRUCTION
DETAILS - DUNE PLANTING AND SAND FENCE

SHEET NUMBER
C-419

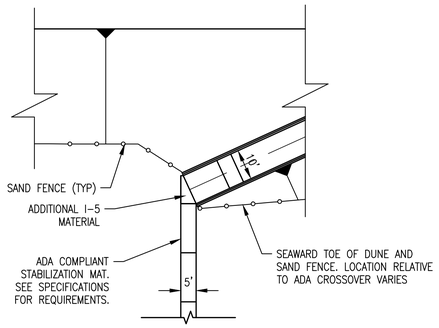

1 DETAIL - ADA STABILIZATION MAT TIE-IN TO I-5 AT CROSSOVERS
SCALE: AS SHOWN

20 0 20 40
SCALE IN FEET

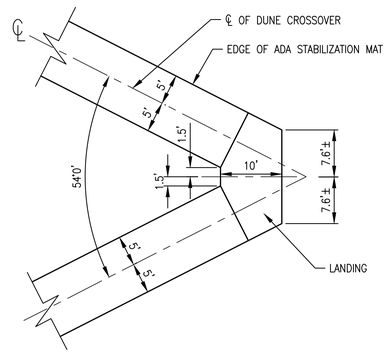

2 DETAIL - ADA CROSSOVER EXPANDED SWITCH BACK
SCALE: AS SHOWN

10 0 10 20
SCALE IN FEET

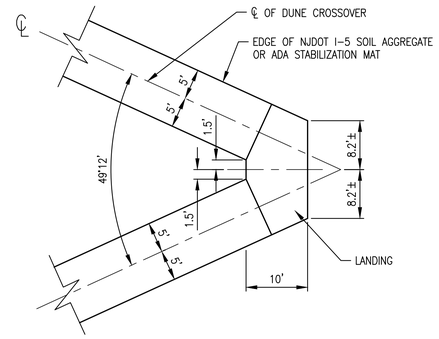

3 DETAIL - ADA CROSSOVER SWITCH BACK
SCALE: AS SHOWN

10 0 10 20
SCALE IN FEET

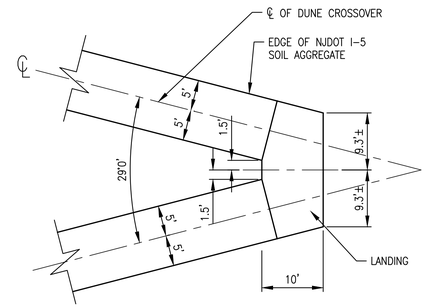

4 DETAIL - ADA CROSSOVER COMPACTED SWITCH BACK
SCALE: AS SHOWN

10 0 10 20
SCALE IN FEET

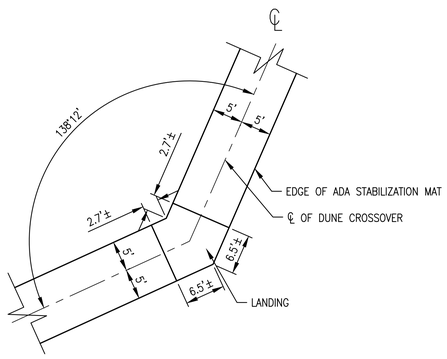

5 DETAIL - ADA CROSSOVER WIDE ANGLED CORNER
SCALE: AS SHOWN

10 0 10 20
SCALE IN FEET

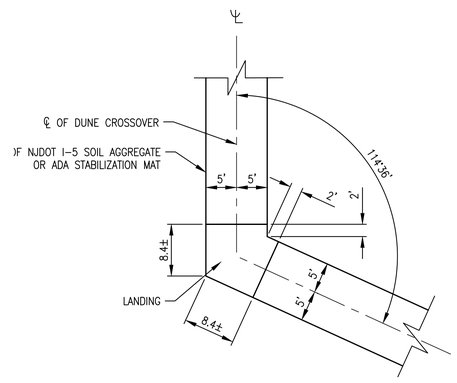

6 DETAIL - ADA CROSSOVER ANGLED CORNER
SCALE: AS SHOWN

10 0 10 20
SCALE IN FEET

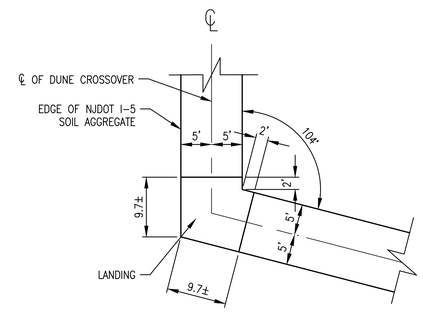

7 DETAIL - ADA CROSSOVER ANGLED CORNER
SCALE: AS SHOWN

10 0 10 20
SCALE IN FEET

NOTES:

1. ORIENTATION OF DETAIL MAY BE OPPOSITE ON SOME PLANS.

US Army Corps of Engineers
Philadelphia District

MARK	ACTION	DATE	BY	DESCRIPTION

U.S. ARMY CORPS OF ENGINEERS
PHILADELPHIA DISTRICT
PHILADELPHIA, PA 19107-3390
www.nap.usace.army.mil

DWN BY: PGS	DESIGNED BY: DCL
CKD BY: DM	REVIEWED BY: [illegible]
DWG SCALE: AS SHOWN	
DWG. SIZE: 22"x27"-ANSI D	FILE NAME: C420FDR-US-MISC.dwg
ISSUE/RELEASE DATE: 9/01/16;REV/REV: 06 JUN 2018	
PROJ. NUMBER:	
SOLICITATION NUMBER: IFB NO. W912BU-18-B-0014	
CONTRACT NUMBER:	

MANASQUAN INLET TO BARNEGAT INLET
OCEAN COUNTY, NEW JERSEY

BEACHFILL
INITIAL CONSTRUCTION
DETAILS - MISCELLANEOUS
I

SHEET NUMBER
C-420

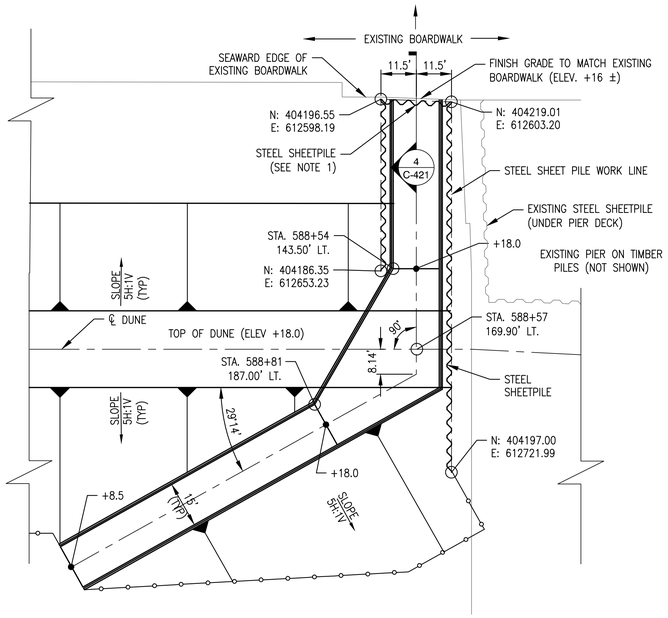

1 PLAN - STEEL SHEETPILE GEOMETRY - SEASIDE HEIGHTS (GRANT AVE.)
SCALE: AS SHOWN

20 0 20 40
SCALE IN FEET

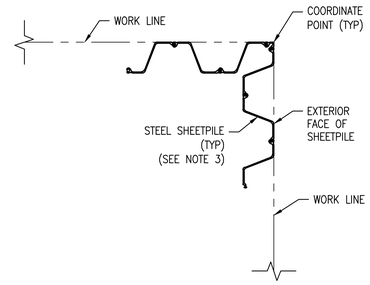

2 DETAIL - STEEL SHEETPILE WORK LINE LOCATION
SCALE: AS SHOWN

2 0 2 4
SCALE IN FEET

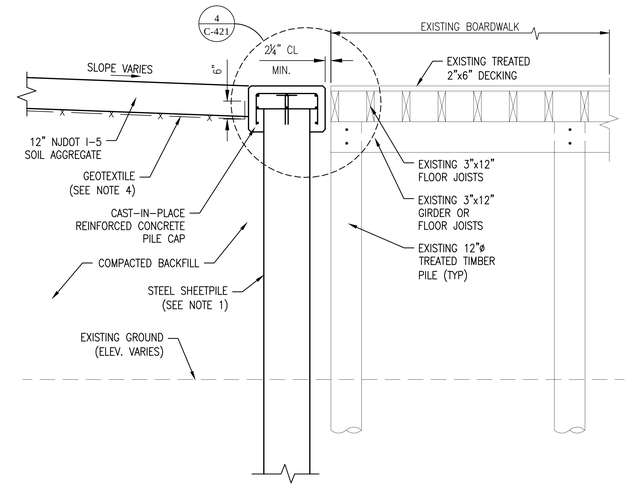

3 DETAIL - STEEL SHEETPILE AT BOARDWALK
SCALE: AS SHOWN

2 0 2 4
SCALE IN FEET

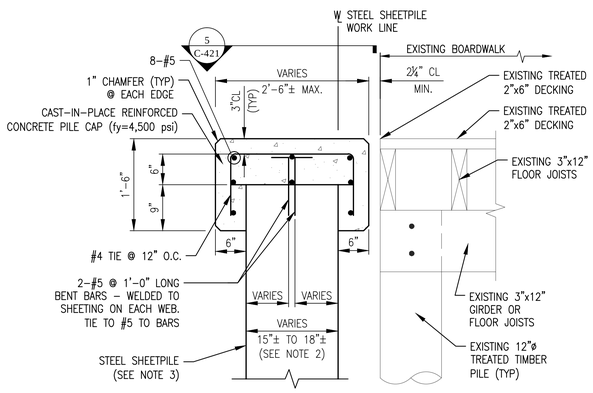

4 DETAIL - CONCRETE CAP
SCALE: AS SHOWN

1 0 1 2
SCALE IN FEET

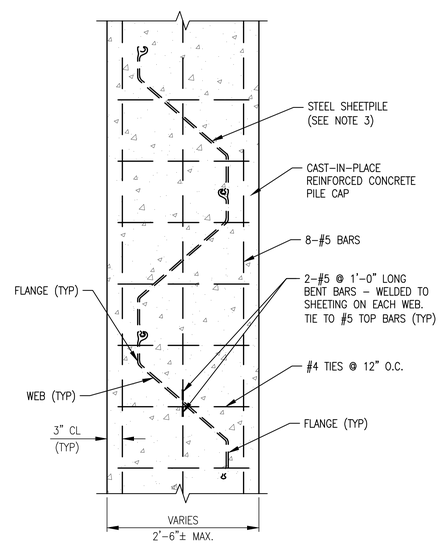

5 SECTION
SCALE: AS SHOWN

1 0 1 2
SCALE IN FEET

NOTES:

1. CONCRETE CAP NOT SHOWN FOR CLARITY, SEE DETAIL 4/C-421.
2. FOR SHEETPILE REQUIREMENTS, SEE CONTRACT SPECIFICATIONS.
3. SECTION HEIGHT AND WIDTH VARIES DEPENDING ON THE MANUFACTURER OF THE SHEETPILE.
4. GEOTEXTILE OFFSET FOR CLARITY.

US Army Corps of Engineers Philadelphia District

MARK	ACTION	DATE	BY

MARK	DESCRIPTION	DATE	BY

U.S. ARMY CORPS OF ENGINEERS
PHILADELPHIA DISTRICT
PHILADELPHIA, PA 19107-3390
www.nap.usace.army.mil

DWN BY: PGS
CKD BY: DAI
DESIGNED BY: DCL
REVIEWED BY: DAI, ET
ISSUE/RELEASE DATE: 95% REVIEW 06 JUN 2016
PROJ. NUMBER:
SOLICITATION NUMBER: IFB NO. W912BU-14-B-0074
CONTRACT NUMBER:
DWG SCALE: AS SHOWN
DWG. SIZE: 22"x32"-ANSI D
FILE NAME: C421-STD-MJ-S-STEEL SHEETPILE.dwg

MANASQUAN INLET TO BARNEGAT INLET
OCEAN COUNTY, NEW JERSEY
BEACHFILL
INITIAL CONSTRUCTION
DETAILS - STEEL SHEETPILE

SHEET NUMBER
C-421